E10025

Hexagon nut

NUT M12X1 V4A 2 PIECES

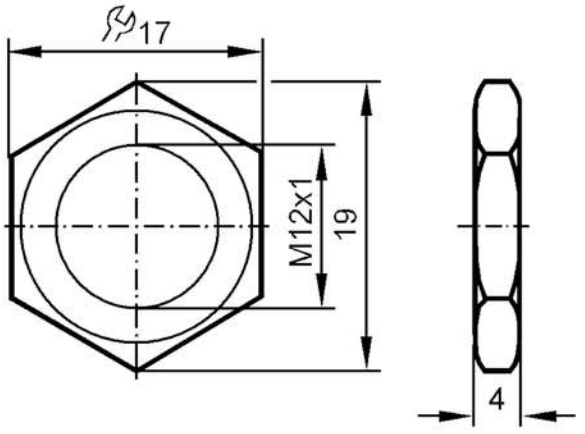

Mechanical data		
Weight	[g]	10
Dimensions	[mm]	M12 x 1
Thread designation		M12 x 1
Materials		stainless steel (1.4571/316Ti)
Remarks		
Pack quantity		2 pcs.