

Variable frequency drive, 3-phase 480 V, 3.3A, EMC filter, Internal braking transistor, protection type IP54

Powering Business Worldwide

Part no.	**DG1-343D3FB-C54C**
Catalog No.	**9702-1103-00P**
Eaton Catalog No.	**DG1-343D3FB-C54C**
EL-Nummer (Norway)	**4138090**

Delivery program

Product range			Variable frequency drives
Part group reference (e.g. DIL)			DG1
Rated operational voltage	U_e		400 V AC, 3-phase 480 V AC, 3-phase 500 V AC, 3-phase
Output voltage with V_e	U_2		400 V AC, 3-phase 480 V AC, 3-phase 500 V AC, 3-phase
Mains voltage (50/60Hz)	U_{LN}	V	380 (-15%) - 500 (+10%)
Rated operational current			
At 150% overload	I_e	A	3.3
Note			Rated operational current for a switching frequency of 1 - 12 kHz and an ambient temperature of +50 °C for a 150% overload and +40 °C for a 110% overload
At 110% overload	I_e	A	4.3
Note			Overload cycle for 60 s every 600 s
Assigned motor rating			
Note			for normal internally and externally ventilated 4 pole, three-phase asynchronous motors with 1500 rpm^{-1} at 50 Hz or 1800 min^{-1} at 60 Hz
Note			Overload cycle for 60 s every 600 s
Note			at 400 V, 50 Hz
150 % Overload	P	kW	1.1
110 % Overload	P	kW	1.5
150 % Overload	I_M	A	2.6
110 % Overload	I_M	A	3.6
Note			at 500 V, 50 Hz
150 % Overload	P	kW	1.5
110 % Overload	P	kW	2.2
150 % Overload	I_M	A	2.9
110 % Overload	I_M	A	4
Note			at 480 V, 60 Hz
150 % Overload	P	HP	1.5
110 % Overload	P	HP	2
150 % Overload	I_M	A	3
110 % Overload	I_M	A	3.4
Degree of Protection			IP54/NEMA12
Interface/field bus (built-in)			Modbus RTU, Modbus TCP, BACnet MS/TP, Ethernet IP
Fieldbus connection (optional)			Profibus, CAN, DeviceNet, i.V. ProfiNet, SmartWire-DT
Fitted with			Radio interference suppression filter Additional PCB protection Multi-line graphic display Brake chopper DC link choke
Frame size			FS1
Connection to SmartWire-DT			with SmartWire-DT module DXG-NET-SWD

Technical data

General

Standards			Specification for general requirements: IEC/EN 61800-2

			EMC requirements: IEC/EN 61800-3 Safety requirements: IEC/EN 61800-5
Certifications			CE, UL, cUL, RCM, UkrSEPRO, EAC
Production quality			RoHS, ISO 9001
Climatic proofing	ρ_w	%	< 95%, average relative humidity (RH), non-condensing, non-corrosive
Air quality			3C2, 3S2
Ambient temperature			
operation (150 % overload)	ϑ	°C	-30 - +50 (max. +60 with 1 % derating per Kelvin temperature rise)
operation (110 % overload)	ϑ	°C	-30 - +40 (max. +55 mit 1 % Derating pro Kelvin Temperaturerhöhung)
Storage	ϑ	°C	-40 - +70
Overvoltage category			III
Pollution degree			2
Radio interference level			
Radio interference class (EMC)			C1 (with external filter, for conducted emissions only), C2, C3, depending on the motor cable length, the connected load, and ambient conditions. External radio interference suppression filters (optional) may be necessary.
Environment (EMC)			1st and 2nd environments as per EN 61800-3
maximum motor cable length	l	m	C2 ≤ 10 m C3 ≤ 50 m
Mechanical shock resistance		g	EN 61800-5-1, EN 60068-2-27 UPS drop test (for weights inside the UPS frame) Storage and transportation: maximum 15 g, 11 ms (inside the packaging)
Vibration			EN 61800-5-1, EN 60068-2-6: 5 - 150 Hz Amplitude: 1 mm (peak) at 5 - 15.8 Hz Maximum acceleration amplitude: 1 g at 15.8 – 150 Hz
Mounting position			Vertical
Altitude		m	0 - 1000 m above sea level Above 1000 m: 1% derating for every 100 m max. 3000 m (2000 m for Corner Grounded TN Systems)
Degree of Protection			IP54/NEMA12
Protection against direct contact			BGV A3 (VBG4, finger- and back-of-hand proof)

Main circuit

Supply			
Rated operational voltage	U_e		400 V AC, 3-phase 480 V AC, 3-phase 500 V AC, 3-phase
Mains voltage (50/60Hz)	U_{LN}	V	380 (-15%) - 500 (+10%)
Input current (150% overload)	I_{LN}	A	3.1
Input current (110% overload)	I_{LN}	T	4
System configuration			TN-S, TN-C, TN-C-S, TT, IT
Supply frequency	f_{LN}	Hz	50/60
Frequency range	f_{LN}	Hz	45 - 66
Mains switch-on frequency			Maximum of one time every 60 seconds
Mains current distortion	THD	%	35.3
Rated conditional short-circuit current	I_q	kA	< 100
Power section			
Function			Variable frequency drive with internal DC link, DC link choke and IGBT inverter
Overload current (150% overload)	I_L	A	4.95
Overload current (110% overload)	I_L	A	4.73
max. starting current (High Overload)	I_H	%	200
Note about max. starting current			for 2 seconds every 20 seconds
Output voltage with V_e	U_2		400 V AC, 3-phase 480 V AC, 3-phase 500 V AC, 3-phase
Output Frequency	f_2	Hz	0 - 50/60 (max. 400)
Switching frequency	f_{PWM}	kHz	4 adjustable 1 - 12
Operation Mode			U/f control Speed control with slip compensation sensorless vector control (SLV) Torque regulation
Frequency resolution (setpoint value)	Δf	Hz	0.01

Rated operational current			
At 150% overload	I_e	A	3.3
At 110% overload	I_e	A	4.3
Note			Rated operational current for a switching frequency of 1 - 12 kHz and an ambient temperature of +50 °C for a 150% overload and +40 °C for a 110% overload
Motor current limit	I	A	0.1 - 2 x I_H (CT)
Power loss			
Heat dissipation at rated operational current I_e =150 %	P_V	W	60
Efficiency	η	%	98.1
Maximum leakage current to ground (PE) without motor	I_{PE}	mA	2.9
Fan			temperature controlled Tool-less swapping
Fitted with			Radio interference suppression filter Additional PCB protection Multi-line graphic display Brake chopper DC link choke
Safety function			STO (Safe Torque Off, SIL1, PLc Cat 1)
Frame size			FS1
Motor feeder			
Note			for normal internally and externally ventilated 4 pole, three-phase asynchronous motors with 1500 rpm^{-1} at 50 Hz or 1800 min^{-1} at 60 Hz
Note			Overload cycle for 60 s every 600 s
Note			at 400 V, 50 Hz
150 % Overload	P	kW	1.1
Note			at 500 V, 50 Hz
150 % Overload	P	kW	1.5
110 % Overload	P	kW	1.5
Note			at 480 V, 60 Hz
150 % Overload	P	HP	1.5
110 % Overload	P	HP	2
maximum permissible cable length	I	m	screened: 100
Braking function			
Standard braking torque			max. 30 % M_N
DC braking torque			adjustable to 150 %
Braking torque with external braking resistance			Max. 100% of rated operational current I_e with external braking resistor
minimum external braking resistance	R_{min}	Ω	63
Switch-on threshold for the braking transistor	U_{DC}	V	850 V DC
DC braking	%	I/I_e	≦ 150, adjustable

Control section

External control voltage	U_c	V	24 V DC (max. 250 mA options incl.)
Reference voltage	U_s	V	10 V DC (max. 10 mA)
Analog inputs			2, parameterizable, 0 - 10 V DC, 2 - 10 V DC, -10 - +10 V DC, 0/4 - 20 mA
Analog outputs			2, parameterizable, 0 - 10 V, 0/4 - 20 mA
Digital inputs			8, parameterizable, max. 30 V DC
Digital outputs			1, parameterizable, 24 V DC
Relay outputs			3, parameterizable, 2 changeover contacts and 1 N/O, 6 A (240 VAC) / 6 A (24 VDC)
Interface/field bus (built-in)			Modbus RTU, Modbus TCP, BACnet MS/TP, Ethernet IP
Expansion slots			2

Assigned switching and protective elements

Power Wiring			
IEC (Type B, gG), 150 %			PKZM0-4
Safety device (110% overload)			PKM0-6.3
UL (Class CC or J)		A	10
150 % overload (CT/I_H, at 50 °C)			Integrated DC link choke, uk = 5%
110 % overload (VT/I_L, at 40 °C)			Integrated DC link choke, uk = 5%
Motor feeder			

150 % overload (CT/I_H, at 50 °C)			DX-LM3-005
110 % overload (VT/I_L, at 40 °C)			DX-LM3-005
150 % overload (CT/I_H, at 50 °C)			DX-SIN3-004
110 % overload (VT/I_L, at 40 °C)			DX-SIN3-010
10 % duty factor (DF)			DX-BR075-1K4
20 % duty factor (DF)			DX-BR075-5K1
40 % duty factor (DF)			DX-BR075-5K1

Design verification as per IEC/EN 61439

Technical data for design verification			
Rated operational current for specified heat dissipation	I_n	A	3.3
Equipment heat dissipation, current-dependent	P_{vid}	W	60
Operating ambient temperature max.		°C	-30
Operating ambient temperature max.		°C	60
IEC/EN 61439 design verification			
10.2 Strength of materials and parts			
10.2.2 Corrosion resistance			Meets the product standard's requirements.
10.2.3.1 Verification of thermal stability of enclosures			Meets the product standard's requirements.
10.2.3.2 Verification of resistance of insulating materials to normal heat			Meets the product standard's requirements.
10.2.3.3 Verification of resistance of insulating materials to abnormal heat and fire due to internal electric effects			Meets the product standard's requirements.
10.2.4 Resistance to ultra-violet (UV) radiation			Meets the product standard's requirements.
10.2.5 Lifting			Does not apply, since the entire switchgear needs to be evaluated.
10.2.6 Mechanical impact			Does not apply, since the entire switchgear needs to be evaluated.
10.2.7 Inscriptions			Meets the product standard's requirements.
10.3 Degree of protection of ASSEMBLIES			Does not apply, since the entire switchgear needs to be evaluated.
10.4 Clearances and creepage distances			Meets the product standard's requirements.
10.5 Protection against electric shock			Does not apply, since the entire switchgear needs to be evaluated.
10.6 Incorporation of switching devices and components			Does not apply, since the entire switchgear needs to be evaluated.
10.7 Internal electrical circuits and connections			Is the panel builder's responsibility.
10.8 Connections for external conductors			Is the panel builder's responsibility.
10.9 Insulation properties			
10.9.2 Power-frequency electric strength			Is the panel builder's responsibility.
10.9.3 Impulse withstand voltage			Is the panel builder's responsibility.
10.9.4 Testing of enclosures made of insulating material			Is the panel builder's responsibility.
10.10 Temperature rise			The panel builder is responsible for the temperature rise calculation. Eaton will provide heat dissipation data for the devices.
10.11 Short-circuit rating			Is the panel builder's responsibility. The specifications for the switchgear must be observed.
10.12 Electromagnetic compatibility			Is the panel builder's responsibility. The specifications for the switchgear must be observed.
10.13 Mechanical function			The device meets the requirements, provided the information in the instruction leaflet (IL) is observed.

Technical data ETIM 6.0

Low-voltage industrial components (EG000017) / Frequency converter =< 1 kV (EC001857)			
Electric engineering, automation, process control engineering / Electrical drive / Static frequency converter / Static frequency converter = < 1 kv (ecl@ss8.1-27-02-31-01 [AKE177011])			
Mains voltage		V	380 - 500
Mains frequency			50/60Hz
Number of phases input			3
Number of phases output			3
Max. output frequency		Hz	400
Max. output voltage		V	480
Rated output current I2N		A	3.3
Max. output at quadratic load at rated output voltage		kW	1.5
Max. output at linear load at rated output voltage		kW	2.2
With control unit			Yes

Application in industrial area permitted		Yes
Application in domestic- and commercial area permitted		Yes
Supporting protocol for TCP/IP		Yes
Supporting protocol for PROFIBUS		Yes
Supporting protocol for CAN		Yes
Supporting protocol for INTERBUS		No
Supporting protocol for ASI		No
Supporting protocol for KNX		No
Supporting protocol for MODBUS		Yes
Supporting protocol for Data-Highway		No
Supporting protocol for DeviceNet		Yes
Supporting protocol for SUCONET		No
Supporting protocol for LON		No
Supporting protocol for PROFINET IO		Yes
Supporting protocol for PROFINET CBA		No
Supporting protocol for SERCOS		No
Supporting protocol for Foundation Fieldbus		No
Supporting protocol for EtherNet/IP		No
Supporting protocol for AS-Interface Safety at Work		No
Supporting protocol for DeviceNet Safety		No
Supporting protocol for INTERBUS-Safety		No
Supporting protocol for PROFIsafe		No
Supporting protocol for SafetyBUS p		No
Supporting protocol for other bus systems		Yes
Number of HW-interfaces industrial Ethernet		1
Number of HW-interfaces PROFINET		1
Number of HW-interfaces RS-232		0
Number of HW-interfaces RS-422		0
Number of HW-interfaces RS-485		1
Number of HW-interfaces serial TTY		0
Number of HW-interfaces USB		0
Number of HW-interfaces parallel		0
Number of HW-interfaces other		1
With optical interface		No
With PC connection		Yes
Integrated breaking resistance		Yes
4-quadrant operation possible		Yes
Type of converter		U converter
Degree of protection (IP)		IP54
Height	mm	327
Width	mm	152
Depth	mm	200
Relative symmetric net frequency tolerance	%	10
Relative symmetric net current tolerance	%	10

Approvals

Product Standards		UL508C, CSA-C22.2 No. 274-13; IEC/EN61800-3; IEC/EN61800-5; CE marking
UL File No.		E134360
UL Category Control No.		NMMS, NMMS7
CSA File No.		UL report applies to both US and Canada
North America Certification		UL listed, certified by UL for use in Canada
Suitable for		Branch circuits
Max. Voltage Rating		3~500 V AC IEC: TN-S UL/CSA: 'Y' (Solidly Grounded Wye)
Degree of Protection		IP54/NEMA12

Dimensions

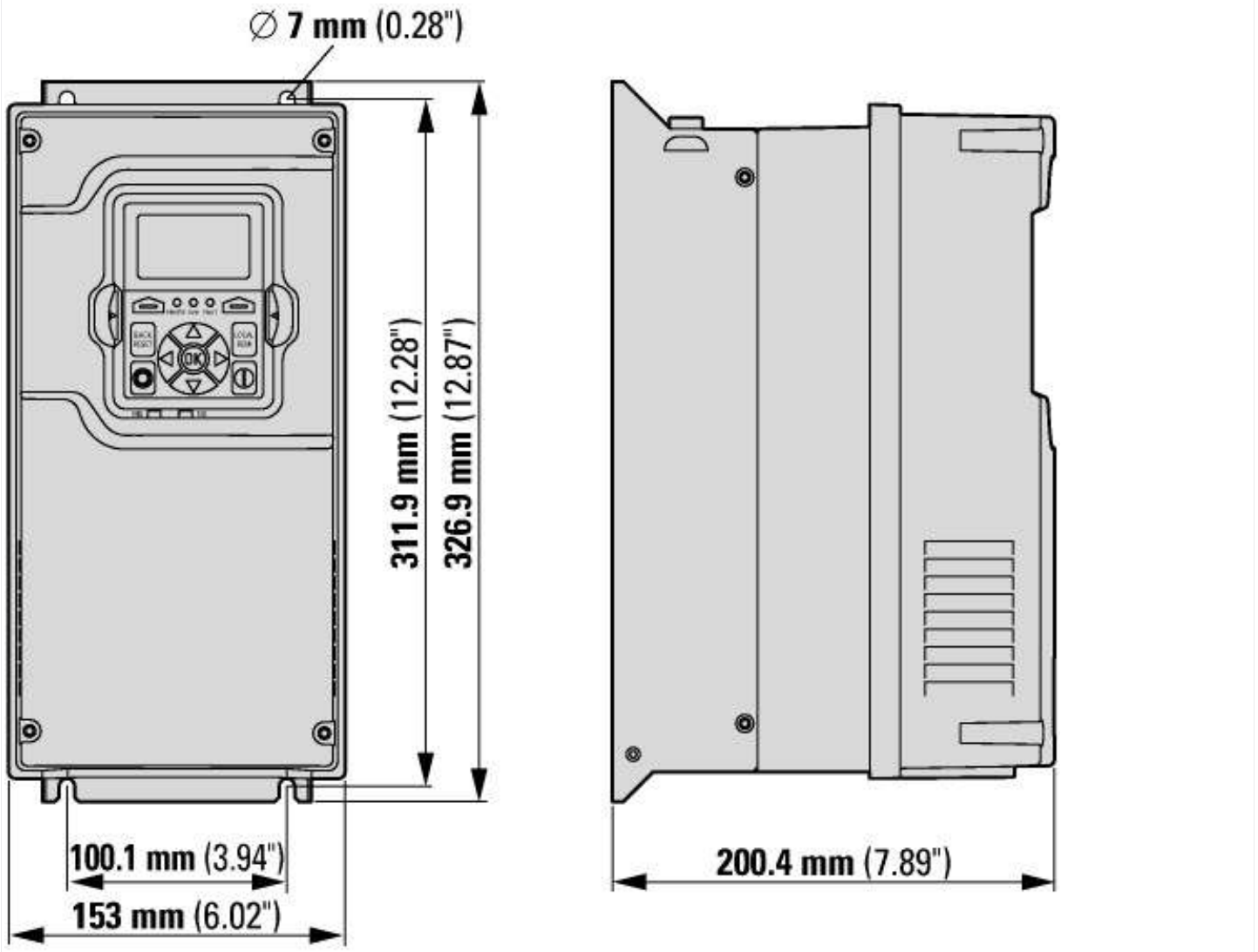

Additional product information (links)

Documentation	http://www.eaton.eu/Europe/Electrical/ProductsServices/AutomationControl/SwitchingProtectingDrivingMotors/PowerXLfrequencydrives/DG1GeneralPurposeDrives/index.htm?wtredirect=www.eaton.eu/dg1#tabs-7
Manuals	http://www.eaton.eu/Europe/Electrical/ProductsServices/AutomationControl/SwitchingProtectingDrivingMotors/PowerXLfrequencydrives/DG1GeneralPurposeDrives/index.htm?wtredirect=www.eaton.eu/dg1#tabs-8

© 12/2017 by Eaton Industries GmbH