ROTH+CO. AG

Temperature Transducer

RESISTANCE SENSOR

Item number: 101870

- **Measuring range -50 °C … +105 °C**
- **Protecting tube ø 5,0 x 20 mm**
- **Pt1000, 4-wire**
- **Cable length 3 m**
- **Protection class IP68**

SENSOR

Measuring resistance	Pt1000, DIN EN 60751
Temperature-measuring range	-50 °C … +105 °C
Kind of measuring element	Thinfilm
Class of accuracy / limiting deviation	A / ±0,15 °C at 0 °C

ELECTRICAL CONNECTION

Type of connection Pt1000	4-wire
Terminal connection	Free ends

SHAPE FACTORS / MATERIAL

Protecting tube	Ø 5,0 x 20 mm / Santoprene
Connection cable	Ø 4,0 x 3‘000 mm
Oversheath	TPE / Santoprene
Conductor isolation	PP

ENVIRONMENTAL CONDITIONS

IP protection class	IP68
Operation temperature cable	-50 °C …+105 °C
Operation temp. measuring point	-50 °C …+105 °C

DETAILS

The domain of definition of class A for thinfilm-sensorelements is between –30 °C … +300 °C.

DIMENSIONAL DRAWING

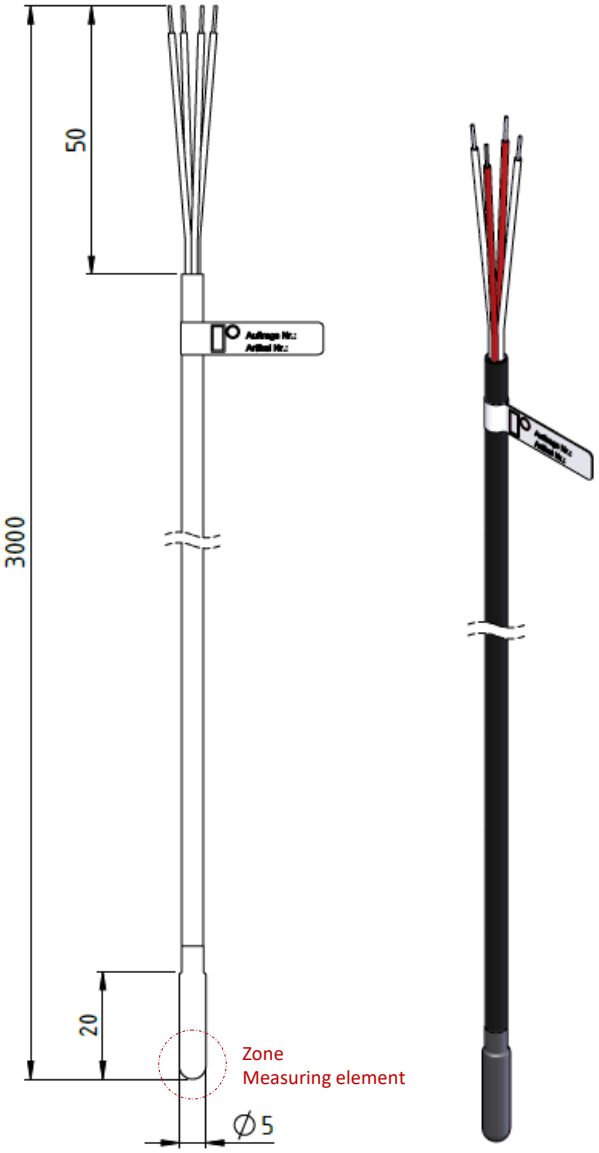

ELECTRICAL CONNECTION

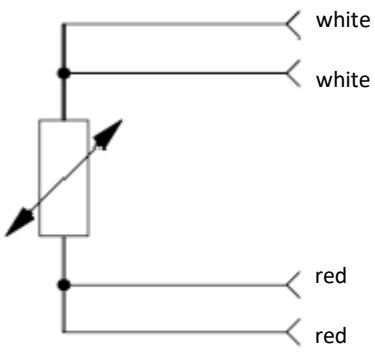

DIN EN 60751, Pt1000