Inductive sensor
IO-Link Communication and Configuration
BI10U-M18-IOL6X2-H1141

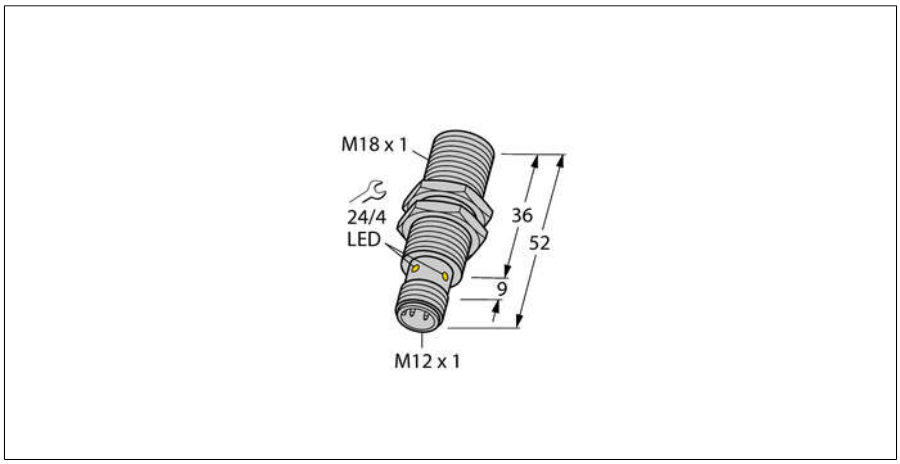

- **Threaded barrel, M18 x 1**
- **Chrome-plated brass**
- **Factor 1 for all metals**
- **Protection class IP68**
- **Resistant to magnetic fields**
- **Large switching distance**
- **DC 4-wire, 10…30 VDC**
- **M12 x 1 connector**
- **Configuration and communication via IO-Link v1.1 or via standard I/O**
- **Electrical outputs independently configurable**
- **Switching distance can be parametrized per output and hysteresis**
- **Identification via 32-byte memory**
- **Temperature monitoring with adjustable limits**
- **Various timer and pulse monitoring functions**

Type designation	BI10U-M18-IOL6X2-H1141
Ident no.	1644875
Rated switching distance Sn	10 mm
Mounting conditions	Flush
Secured operating distance	≤ (0,81 x Sn) mm
Repeat accuracy	≤ 2 % of full scale
Temperature drift	≤ ± 10 %
Hysteresis	3…15 %
Ambient temperature	-25…+70 °C
Operating voltage	10…30 VDC
Residual ripple	≤ 10 % U_{ss}
DC rated operational current	≤ 150 mA
No-load current I_0	≤ 20 mA
Residual current	≤ 0.1 mA
Isolation test voltage	≤ 0.5 kV
Short-circuit protection	yes/ Cyclic
Voltage drop at I_e	≤ 1.8 V
Wire breakage/Reverse polarity protection	yes/ Complete
Output function	4-wire, NO/NC, PNP/NPN, IO-Link
Output 1	Switching output or IO-Link mode
Output 2	switching output
Switching frequency	0.5 kHz
IO-Link	
IO-Link Specification	V 1.1
IO-Link port type	Class A
Communication Mode	COM 2 (38.4 kBaud)
Process data width	16 bit
Switchpoint information	2 bit
Status bit information	3 bit
Frame type	2.2
Minimum cycle time	8 ms
Function Pin 4	IO-Link
Function Pin 2	DI
Maximum cable length	20 m
Design	Threaded barrel,M18 × 1
Dimensions	52 mm
Housing material	Metal, CuZn, Chrome-plated
Active area material	Plastic, LCP
Max. tightening torque housing nut	10 Nm
Electrical connection	Connectors, M12 × 1
Vibration resistance	55 Hz (1 mm)
Shock resistance	30 g (11 ms)
Protection class	IP68
MTTF	874 years acc. to SN 29500 (Ed. 99) 40 °C
Packaging unit	1

Wiring Diagram



Functional principle

Inductive sensors detect metal objects contactless and wear-free. *uprox®3* sensors have significant advantages due to their patented ferrite-coreless multicoil system. They excel in largest switching distances, maximum flexibility and operational reliability as well as efficient standardization. In addition, the *uprox®3-IO-Link* sensors allow certain parameters to be set within predefined limits and various device functions to be configured to customer needs, using an IO-Link Master. For detailed information refer to the *uprox®3-IO-Link* manual.

Edition • 2019-02-15T21:01:22+01:00

Power-on indication	LED,Green
Switching state	LED, Yellow

Edition • 2019-02-15T21:01:22+01:00

Inductive sensor
IO-Link Communication and Configuration
BI10U-M18-IOL6X2-H1141

Distance D	36 mm
Distance W	3 x Sn
Distance T	3 x B
Distance S	1.5 x B
Distance G	6 x Sn

Diameter active area B	Ø 18 mm

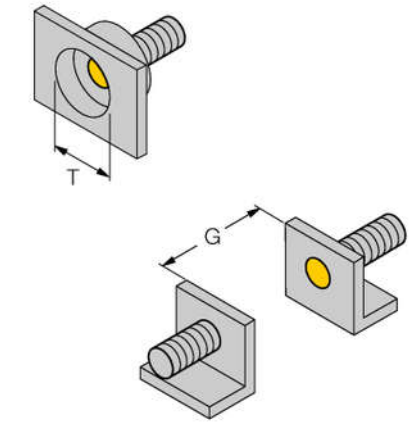

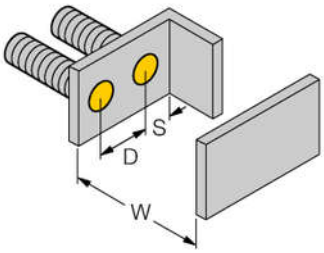

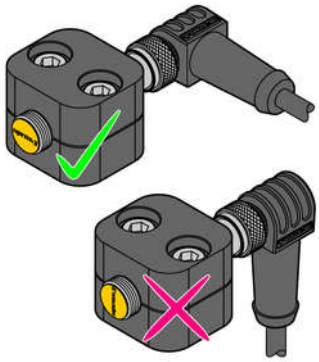

When installing the sensor in combination with the illustrated half-shell-clamp, observe its correct alignment towards the clamp. For this, see the uprox-lettering on the front cap of the sensor and the adjacent installation drawing.

Edition • 2019-02-15T21:01:22+01:00

Inductive sensor
IO-Link Communication and Configuration
BI10U-M18-IOL6X2-H1141

Accessories

Type code	Ident no.	Description	
BST-18B	6947214	Fixing clamp for threaded barrel devices, with dead-stop; material: PA6	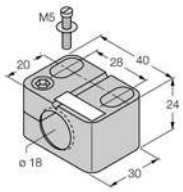
MW-18	6945004	Mounting bracket for threaded barrel devices; material: Stainless steel A2 1.4301 (AISI 304)	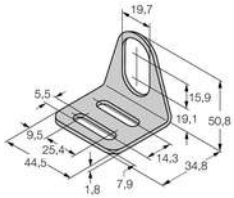
BSS-18	6901320	Mounting bracket for smooth and threaded barrel devices; material: Polypropylene	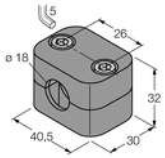
USB-2-IOL-0002	6825482	IO-Link Master with integrated USB port	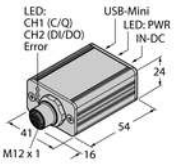

Edition • 2019-02-15T21:01:22+01:00