IT5021

Inductive sensor

ITB3001-BPKG/AS

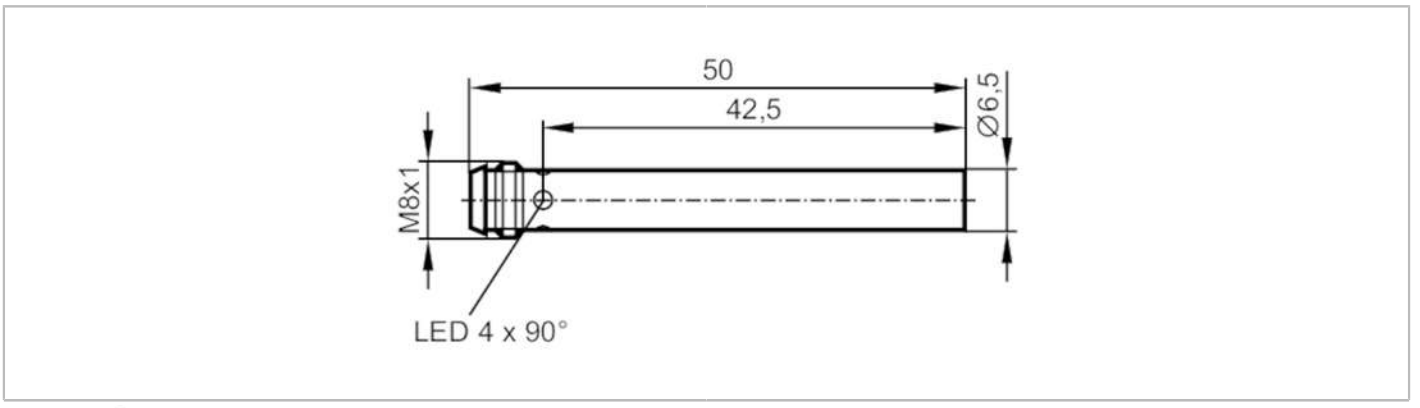

Product characteristics		
Electrical design		PNP
Output function		normally open
Sensing range	[mm]	1
Housing		cylindrical
Dimensions	[mm]	Ø 6.5 / L = 50
Electrical data		
Operating voltage	[V]	10...30 DC
Current consumption	[mA]	10
Protection class		III
Reverse polarity protection		yes
Outputs		
Electrical design		PNP
Output function		normally open
Max. voltage drop switching output DC	[V]	2.5
Permanent current rating of switching output DC	[mA]	100
Switching frequency DC	[Hz]	2000
Short-circuit protection		yes
Overload protection		yes
Detection zone		
Sensing range	[mm]	1
Real sensing range Sr	[mm]	1 ± 10 %
Operating distance	[mm]	0...0.81
Accuracy / deviations		
Correction factor		steel: 1 / stainless steel: 0.7 / brass: 0.3 / aluminium: 0.3 / copper: 0.1
Hysteresis	[% of Sr]	1...20
Switch point drift	[% of Sr]	-10...10
Operating conditions		
Ambient temperature	[°C]	-25...80
Protection		IP 65; (with ifm socket duly screwed on: IP 67)

IT5021

Inductive sensor

ITB3001-BPKG/AS

Tests / approvals			
EMC		EN 61000-4-2 ESD	4 kV CD / 8 kV AD
		EN 61000-4-3 HF radiated	10 V/m
		EN 61000-4-4 Burst	2 kV
		EN 61000-4-6 HF conducted	10 V
		EN 55011 emission	class B
MTTF	[years]	1379	
Embedded software included		yes	
UL approval		Ta	-25...70 °C
		Enclosure type	Type 1
		power supply	Limited Voltage/Current
		UL Approval no.	A017
		File number UL	E174191
Mechanical data			
Weight	[g]	16.8	
Housing		cylindrical	
Mounting		flush mountable	
Dimensions	[mm]	Ø 6.5 / L = 50	
Materials		brass white bronze coated; sensing face: PBT orange; LED window: PPSU	
Displays / operating elements			
Display		switching status	4 x 90° LED, yellow
Accessories			
Items supplied		Mounting clamps: 1	
Remarks			
Pack quantity		1 pcs.	
Electrical connection - plug			

Connector: 1 x M8; coding: A



IT5021

Inductive sensor

ITB3001-BPKG/AS

Connection

