KI5208

Capacitive sensor

KI-3015-FNKG/NI RT

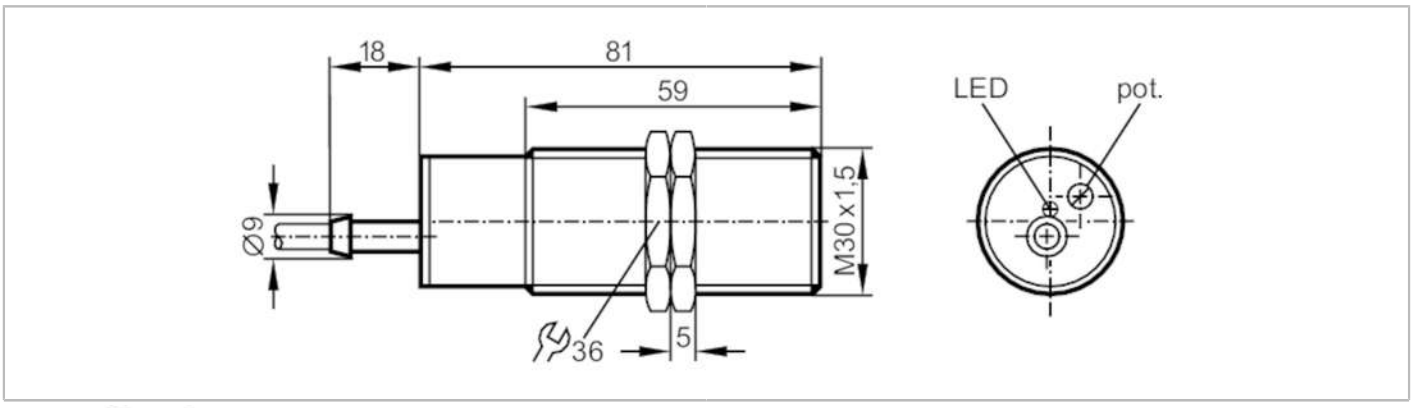

Product characteristics		
Electrical design		NPN
Output function		normally open / normally closed; (selectable)
Sensing range	[mm]	3...15
Housing		threaded type
Dimensions	[mm]	M30 x 1.5 / L = 81
Electrical data		
Operating voltage	[V]	10...36 DC
Current consumption	[mA]	13; (24 V)
Protection class		II
Reverse polarity protection		yes
Outputs		
Electrical design		NPN
Output function		normally open / normally closed; (selectable)
Max. voltage drop switching output DC	[V]	2.5
Permanent current rating of switching output DC	[mA]	250
Switching frequency DC	[Hz]	40
Short-circuit proof		yes
Overload protection		yes
Detection zone		
Sensing range	[mm]	3...15
Sensing range adjustable		yes
Factory setting sensing range	[mm]	15
Real sensing range Sr	[mm]	15 ± 10 %
Operating distance	[mm]	0...12.1
Accuracy / deviations		
Correction factor		glass: 0.4 / water: 1 / ceramics: 0.2 / PVC: 0.2
Hysteresis	[% of Sr]	1...15
Switch point drift	[% of Sr]	-15...15

KI5208

Capacitive sensor

KI-3015-FNKG/NI RT

Operating conditions			
Ambient temperature	[°C]	-25...70	
Protection		IP 65	
Increased immunity		yes; (increased immunity to conducted radio frequency interference)	
Tests / approvals			
EMC		EN 60947-5-2	
MTTF	[years]	694	
Mechanical data			
Weight	[g]	180.5	
Housing		threaded type	
Mounting		non-flush mountable	
Dimensions	[mm]	M30 x 1.5 / L = 81	
Thread designation		M30 x 1.5	
Materials		PBT	
Displays / operating elements			
Display		switching status	1 x LED, red
Accessories			
Items supplied		lock nuts: 2	
		screwdriver: 1	
Remarks			
Pack quantity		1 pcs.	
Electrical connection			

Cable: 2 m, PVC; 3 x 0.5 mm²

Connection

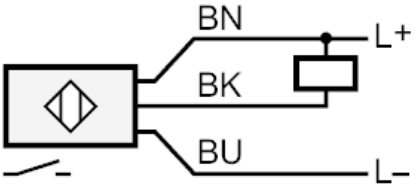

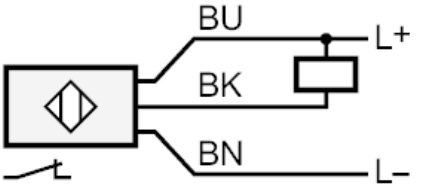

Core colours :

BK = black
BN = brown
BU = blue