# BF0022D060

CONTROL RELAY WITH DC COIL, 60VDC, 2NO AND 2NC



| | | | |
|---|---|---|---|
| Product designation | | | Auxiliary contactor |
| Product type designation | | | BF00 |
| **Contact characteristics** | | | |
| Number of poles | | Nr. | 4 |
| Rated insulation voltage Ui IEC/EN | | V | 690 |
| Rated impulse withstand voltage Uimp | | kV | 6 |
| Operational frequency | | | |
| | min | Hz | 25 |
| | max | Hz | 400 |
| IEC Conventional free air thermal current Ith | | A | 10 |
| Operational current Ie | | | |
| | AC-1 (≤55°C) | A | 0 |
| Short-time allowable current for 10s (IEC/EN60947-1) | | A | 0 |
| Protection fuse | | | |
| | gG (IEC) | A | 25 |
| Tightening torque for terminals | | | |
| | min | Nm | 1.5 |
| | max | Nm | 1.8 |
| | min | lbin | 1.1 |
| | max | lbin | 1.5 |
| Tightening torque for coil terminal | | | |
| | min | Nm | 0.8 |
| | max | Nm | 1 |
| | min | lbin | 0.8 |
| | max | lbin | 0.74 |
| Max number of wires simultaneously connectable | | Nr. | 2 |
| Conductor section | | | |
| AWG/Kcmil | | | |
| | max | | 10 |
| Flexible w/o lug conductor section | | | |
| | min | mm² | 1 |
| | max | mm² | 6 |
| Flexible c/w lug conductor section | | | |
| | min | mm² | 1 |
| | max | mm² | 4 |
| Flexible with insulated spade lug conductor section | | | |
| | min | mm² | 1 |
| | max | mm² | 4 |
| Power terminal protection according to IEC/EN 60529 | | | IP20 when properly wired |
| **Mechanical features** | | | |
| Operating position | | | |
| | normal | | Vertical plan |
| | allowable | | ±30° |


The characteristics described in this document are subject to updates or modifications at any time. The descriptions, technical and functional information, illustrations and instructions in this brochure are purely illustrative, and are consequently not contractually binding

| | | | | |
|---|---|---|---|---|
| Fixing | | | | Screw / DIN rail 35mm |
| Weight | | | g | 500 |
| Conductor section | | | | |
| | AWG/kcmil conductor section | | | |
| | | max | | 10 |
| **Auxiliary contact characteristics** | | | | |
| Thermal current Ith | | | A | 10 |
| IEC/EN 60947-5-1 designation | | | | A600 - P600 |
| Operating current AC15 | | | | |
| | | 230V | A | 3 |
| | | 400V | A | 1.9 |
| | | 500V | A | 1.4 |
| Operating current DC12 | | | | |
| | | 110V | A | 5.7 |
| Operating current DC13 | | | | |
| | | 24V | A | 5.7 |
| | | 48V | A | 2.9 |
| | | 60V | A | 2.3 |
| | | 110V | A | 1.25 |
| | | 125V | A | 1.1 |
| | | 220V | A | 0.55 |
| | | 600V | A | 0.2 |
| **Operations** | | | | |
| Mechanical life | | | cycles | 20000000 |
| **Safety related data** | | | | |
| Performance level B10d according to EN/ISO 13489-1 | | | | |
| | | mechanical load | cycles | 20000000 |
| Mirror contats according to IEC/EN 609474-4-1 | | | | YES |
| EMC compatibility | | | | yes |
| **DC coil operating** | | | | |
| DC rated control voltage | | | V | 60 |
| DC operating voltage | | | | |
| | pick-up | | | |
| | | min | %Us | 70 |
| | | max | %Us | 125 |
| | drop-out | | | |
| | | min | %Us | 10 |
| | | max | %Us | 40 |
| Average coil consumption ≤20°C | | | | |
| | | in-rush | W | 5.4 |
| | | holding | W | 5.4 |
| **Max cycles frequency** | | | | |
| Mechanical operation | | | cycles/h | 3600 |
| **Operating times** | | | | |
| Average time for Us control | | | | |
| | in DC | | | |
| | | Closing NO | | |
| | | | min | ms 54 |
| | | | max | ms 66 |
| | | Opening NO | | |
| | | | min | ms 14 |
| | | | max | ms 17 |


The characteristics described in this document are subject to updates or modifications at any time. The descriptions, technical and functional information, illustrations and instructions in this brochure are purely illustrative, and are consequently not contractually binding

| | | | | |
|---|---|---|---|---|
| | Closing NC | | | |
| | | min | ms | 24 |
| | | max | ms | 30 |
| | Opening NC | | | |
| | | min | ms | 47 |
| | | max | ms | 57 |

## UL technical data

| | | | | |
|---|---|---|---|---|
| General USE | | | | |
| | Auxiliary contacts | | | |
| | | AC current | A | 10 |
| Contact rating of auxiliary contacts according to UL | | | | A600 - P600 |

## Ambient conditions

| | | | | |
|---|---|---|---|---|
| Temperature | | | | |
| | Operating temperature | | | |
| | | min | °C | -50 |
| | | max | °C | 70 |
| | Storage temperature | | | |
| | | min | °C | -60 |
| | | max | °C | 80 |
| Max altitude | | | m | 3000 |

## Resistance & Protection

| | | | | |
|---|---|---|---|---|
| Pollution degree | | | | 3 |

## Dimensions

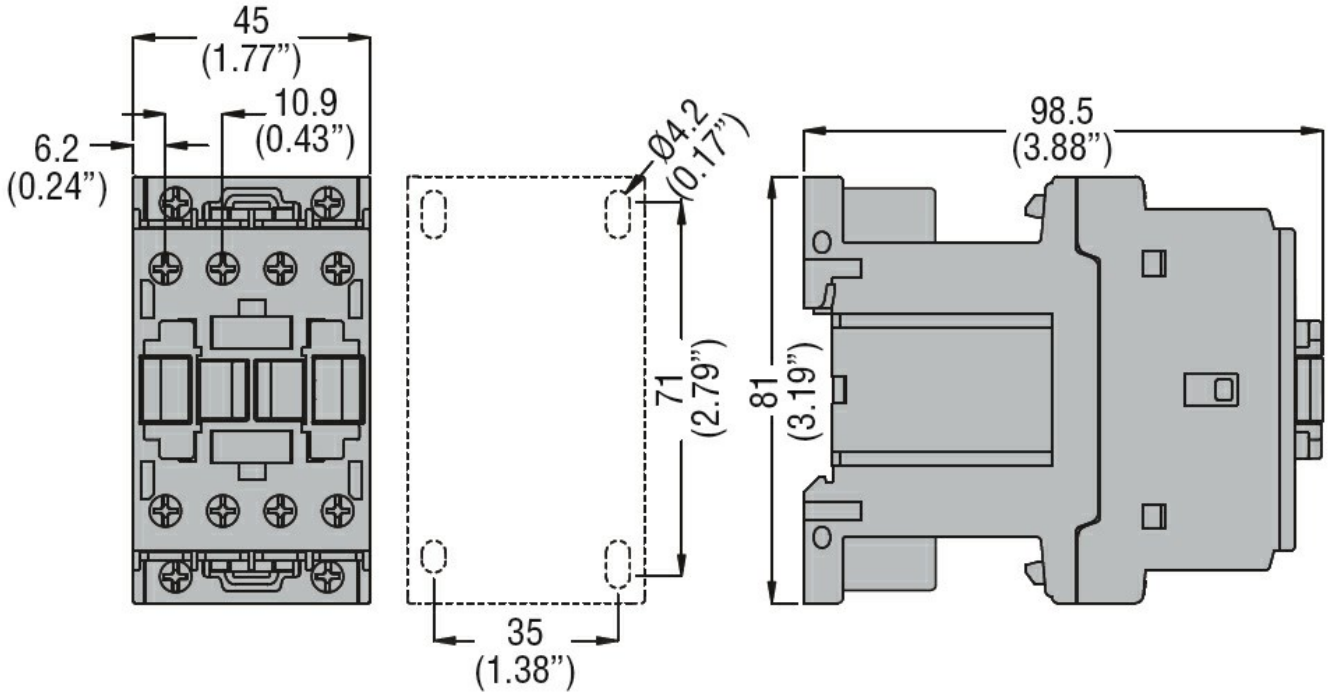


## Wiring diagrams


The characteristics described in this document are subject to updates or modifications at any time. The descriptions, technical and functional information, illustrations and instructions in this brochure are purely illustrative, and are consequently not contractually binding

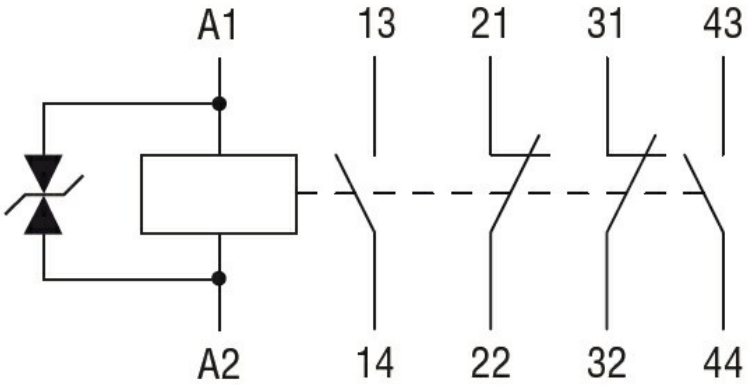


## Certifications and compliance

Compliance

| |
|---|
| CSA C22.2 n° 60947-1 |
| CSA C22.2 n° 60947-5-1 |
| IEC/EN 60947-1 |
| IEC/EN 60947-5-1 |
| UL 60947-1 |
| UL 60947-5-1 |

Certificates

| |
|---|
| CCC |
| cULus |
| EAC |

## ETIM classification

| | |
|---|---|
| ETIM 8.0 | EC000196 - Contactor relay |


The characteristics described in this document are subject to updates or modifications at any time. The descriptions, technical and functional information, illustrations and instructions in this brochure are purely illustrative, and are consequently not contractually binding