PRODUCT DETAILS

ARTICLE: 35071X

WHEEL AS 150X40/50 INOX ROLLER BEAR. 20



Wheel series AS

Wheels with cast soft polyurethane coating 87 Sh.A on polyamide 6 center.
Wheel fitted with stainless steel roller bearing.

Technical data

Wheel diameter	D	150 mm
Tyre width	E	40,0 mm
Bore diameter	d	20 mm
Weight article		0,580 kg
Hub width	L	50 mm
Load Capacity		400 kg

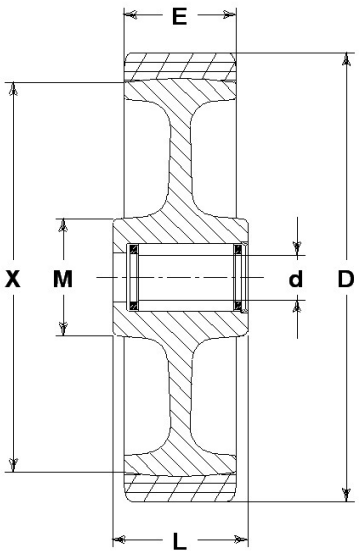

GENERAL INFORMATION / RECOMMENDATIONS AND WARNINGS
The cited text and the complete catalogue in their most up-dated versions are available in the OEM's website page www.lagspa.it/downloads. The dimensions, descriptions, specifications and illustrations herein are indicative and subject to variations without notice. The fact that products are illustrated herein does not necessarily imply they are available from stock nor does it place us under any obligation to supply them.
Tests carried out refer to the original products with original accessories: the replacement of one of the components with others of different manufacture might prevent the same results from being achieved and will automatically invalidate any guarantee. Please contact our technical service concerning any special application.