

# On-Off switch, 3p, 125A, flush mounting

**Part no.** P5-125/E
**Article no.** 280897

Powering Business Worldwide

## Delivery programme

| | | | |
|---|---|---|---|
| Product range | | | On-Off switch |
| Part group reference | | | P5 |
| | | | with black thumb grip and front plate |
| **Notes** | | | auxiliary contact or neutral conductor fitted by user |
| Number of poles | | | 3 pole |
| **Auxiliary contacts** | | | |
|  | | N/O | 0 |
|  | | N/C | 0 |
| Locking facility | | | Not lockable |
| Degree of Protection | | | Front IP65 |
| Design | | | flush mounting |
| | | | 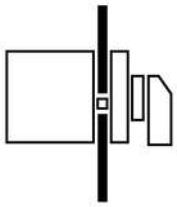 |
| Contact sequence | | | 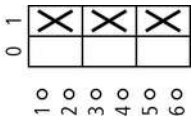 |
| Front plate no. | | | 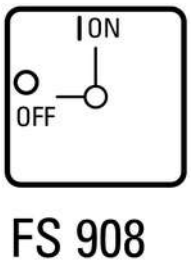 |
| **Motor rating AC-23A, 50 - 60 Hz** | | | |
| 400 V | P | kW | 45 |
| Rated uninterrupted current | $I_u$ | A | 125 |

## Technical data

### General

| | | | |
|---|---|---|---|
| Standards | | | IEC/EN 60947, VDE 0660, IEC/EN 60204, CSA, UL<br>Switch-disconnector according to IEC/EN 60947-3 |
| Climatic proofing | | | Damp heat, constant, to IEC 60068-2-78<br>Damp heat, cyclic, to IEC 60068-2-30 |
| Ambient temperature | | °C | |
| Open | | °C | -25 - +50 |
| Enclosed | | °C | -25 - +40 |
| Overvoltage category/pollution degree | | | III/3 |
| Rated impulse withstand voltage | $U_{imp}$ | V AC | 8000 |
| Mounting position | | | As required |

| | | | |
|---|---|---|---|
| Protection against direct contact when actuated from front (EN 50274) | | | Finger and back-of-hand proof |

## Contacts

| | | | |
|---|---|---|---|
| Mechanical variables | | | |
| Number of poles | | | 3 pole |
| Auxiliary contacts | | | |
| | | N/O | 0 |
| | | N/C | 0 |
| Electrical characteristics | | | |
| Rated operational voltage | $U_e$ | V AC | 690 |
| Rated uninterrupted current | $I_u$ | A | 125 |
| Note on rated uninterrupted current $I_u$ | | | Rated uninterrupted current Iu is specified for max. cross-section. |
| Load rating with intermittent operation, class 12 | | | |
| AB 25 % DF | | x $I_e$ | 2 |
| AB 40 % DF | | x $I_e$ | 1.6 |
| AB 60 % DF | | x $I_e$ | 1.3 |
| Short-circuit rating | | | |
| Fuse | | A gG/gL | 125 |
| Rated short-time withstand current (1 s current) | $I_{cw}$ | $A_{rms}$ | 2500 |
| Note on rated short-time withstand current Icw | | | Current for a time of 1 second |
| Rated conditional short-circuit current | Iq | kA | In = 30: 125 |

## Switching capacity

| | | | |
|---|---|---|---|
| cos φ rated making capacity as per IEC 60947-3 | | A | 850 |
| Rated breaking capacity cos φ to IEC 60947-3 | | A | |
| 230 V | | A | 800 |
| 400/415 V | | A | 750 |
| 500 V | | A | 650 |
| 690 V | | A | 340 |
| Safe isolation to EN 61140 | | | |
| between the contacts | | V AC | 440 |
| Current heat loss per contact at $I_e$ | | W | 8 |
| Lifespan, mechanical | Operations | x $10^6$ | > 0.1 |
| Maximum operating frequency | Operations/h | | 50 |
| AC | | | |
| AC-3 | | | |
| Rating, motor load switch | P | kW | |
| 220 V 230 V | P | kW | 22 |
| 400 V 415 V | P | kW | 37 |
| 500 V | P | kW | 45 |
| 690 V | P | kW | 30 |
| Rated operational current motor load switch | | | |
| 230 V | $I_e$ | A | 72 |
| 400V 415 V | $I_e$ | A | 66 |
| 690 V | $I_e$ | A | 32 |
| AC-21A | | | |
| Rated operational current switch | | | |
| 440 V | $I_e$ | A | 125 |
| AC-23A | | | |
| Motor rating AC-23A, 50 - 60 Hz | P | kW | |
| 230 V | P | kW | 30 |
| 400 V 415 V | P | kW | 45 |
| 500 V | P | kW | 55 |
| 690 V | P | kW | 37 |
| Rated operational current motor load switch | | | |
| 230 V | $I_e$ | A | 96 |

| | | | |
|---|---|---|---|
| 400 V 415 V | $I_e$ | A | 80 |
| 690 V | $I_e$ | A | 39 |
| DC | | | |
| DC-1, Load-break switches L/R = 1 ms | | | |
| Rated operational current | $I_e$ | A | 125 |
| Voltage per contact pair in series | | V | 42 |
| DC-23A, motor load switch L/R = 15 ms | | | |
| 24 V | | | |
| Rated operational current | $I_e$ | A | 125 |
| Contacts | | Quantity | 3 |
| 48 V | | | |
| Rated operational current | $I_e$ | A | 125 |
| Contacts | | Quantity | 3 |
| 60 V | | | |
| Rated operational current | $I_e$ | A | 125 |
| Contacts | | Quantity | 3 |
| 120 V | | | |
| Rated operational current | $I_e$ | A | 40 |
| Contacts | | Quantity | 3 |
| Control circuit reliability at 24 V DC, 10 mA | Fault probability | $H_F$ | $< 10^{-5}$, < 1 fault in 100000 operations |

## Terminal capacities

| | | | |
|---|---|---|---|
| Solid or stranded | | $mm^2$ | 1 x (10 - 95)<br>2 x (10 - 35) |
| Flexible with ferrules to DIN 46228 | | $mm^2$ | 1 x (16 - 70)<br>2 x (16 - 25) |
| Copper strip | Number of segments x width x thickness | mm | 6 x 9 x 0.8 (1 flat conductor) |
| Terminal screw | | | Allen screw 5 |
| Max. tightening torque | | Nm | 14 |

## Technical safety parameters:

| | | | |
|---|---|---|---|
| **Notes** | | | $B10_d$ values as per EN ISO 13849-1, table C1 |

# Data for design verification according to IEC/EN 61439

| | | | |
|---|---|---|---|
| Technical data for design verification | | | |
| Rated operational current for specified heat dissipation | $I_n$ | A | 125 |
| Heat dissipation per pole, current-dependent | $P_{vid}$ | W | 8 |
| Equipment heat dissipation, current-dependent | $P_{vid}$ | W | 0 |
| Static heat dissipation, non-current-dependent | $P_{vs}$ | W | 0 |
| Heat dissipation capacity | $P_{diss}$ | W | 0 |
| IEC/EN 61439 design verification | | | |
| 10.2 Strength of materials and parts | | | |
| 10.2.2 Corrosion resistance | | | Meets the product standard's requirements. |
| 10.2.3.1 Verification of thermal stability of enclosures | | | Meets the product standard's requirements. |
| 10.2.3.2 Verification of resistance of insulating materials to normal heat | | | Meets the product standard's requirements. |
| 10.2.3.3 Verification of resistance of insulating materials to abnormal heat and fire due to internal electric effects | | | Meets the product standard's requirements. |
| 10.2.4 Resistance to ultra-violet (UV) radiation | | | Please enquire |
| 10.2.5 Lifting | | | Does not apply, since the entire switchgear needs to be evaluated. |
| 10.2.6 Mechanical impact | | | Does not apply, since the entire switchgear needs to be evaluated. |
| 10.2.7 Inscriptions | | | Meets the product standard's requirements. |
| 10.3 Degree of protection of ASSEMBLIES | | | Does not apply, since the entire switchgear needs to be evaluated. |
| 10.4 Clearances and creepage distances | | | Meets the product standard's requirements. |
| 10.5 Protection against electric shock | | | Does not apply, since the entire switchgear needs to be evaluated. |
| 10.6 Incorporation of switching devices and components | | | Does not apply, since the entire switchgear needs to be evaluated. |
| 10.7 Internal electrical circuits and connections | | | Is the panel builder's responsibility. |

| | | |
|---|---|---|
| 10.8 Connections for external conductors | | Is the panel builder's responsibility. |
| 10.9 Insulation properties | | |
| 10.9.2 Power-frequency electric strength | | Is the panel builder's responsibility. |
| 10.9.3 Impulse withstand voltage | | Is the panel builder's responsibility. |
| 10.9.4 Testing of enclosures made of insulating material | | Is the panel builder's responsibility. |
| 10.10 Temperature rise | | The panel builder is responsible for the temperature rise calculation. Eaton will provide heat dissipation data for the devices. |
| 10.11 Short-circuit rating | | Is the panel builder's responsibility. The specifications for the switchgear must be observed. |
| 10.12 Electromagnetic compatibility | | Is the panel builder's responsibility. The specifications for the switchgear must be observed. |
| 10.13 Mechanical function | | The device meets the requirements, provided the information in the instruction leaflet (IL) is observed. |

## Technical data ETIM 5.0

Low-voltage industrial components (EG000017) / Switch disconnector (EC000216)

Electric engineering, automation, process control engineering / Low-voltage switch technology / Off-load switch, circuit breaker, control switch / Switch disconnector (ecl@ss8-27-37-14-03 [AKF060009])

| | | |
|---|---|---|
| Version as switch disconnector compact | | Yes |
| Version as main switch | | No |
| Version as maintenance-/service switch | | No |
| Version as safety switch | | No |
| Version as emergency stop installation | | No |
| Max. rated operation voltage Ue AC | V | 690 |
| Rated permanent current Iu | A | 125 |
| Rated operation power AC-3, 400 V | kW | 37 |
| Rated operation power at AC-23, 400 V | kW | 45 |
| Conditioned rated short-circuit current Iq | kA | 30 |
| Number of poles | | 3 |
| Number of auxiliary contacts as normally closed contact | | 0 |
| Number of auxiliary contacts as normally open contact | | 0 |
| Number of auxiliary contacts as change-over contact | | 0 |
| Motor drive optional | | No |
| Motor drive integrated | | No |
| Voltage release optional | | No |
| Device construction | | Built-in device fixed built-in technique |
| Suitable for ground mounting | | No |
| Suitable for front mounting | | Yes |
| Suitable for front mounting center | | No |
| Suitable for distribution board installation | | No |
| Suitable for intermediate mounting | | No |
| Type of control element | | Toggle |
| Interlockable | | No |
| Connection type main current circuit | | Frame clamp |
| Degree of protection (IP), front side | | IP65 |

## Approvals

| | | |
|---|---|---|
| Product Standards | | UL 508; CSA-C22.2 No. 14-05; CSA-C22.2 No. 94; IEC/EN 60947-3; CE marking |
| UL File No. | | E36332 |
| UL Category Control No. | | NLRV |
| CSA File No. | | 223805 |
| CSA Class No. | | 3211-05 |
| North America Certification | | UL listed, CSA certified |
| Suitable for | | Branch circuits, suitable as motor disconnect |
| Degree of Protection | | IEC: IP65; UL/CSA Type 3R, 12 |

## Dimensions

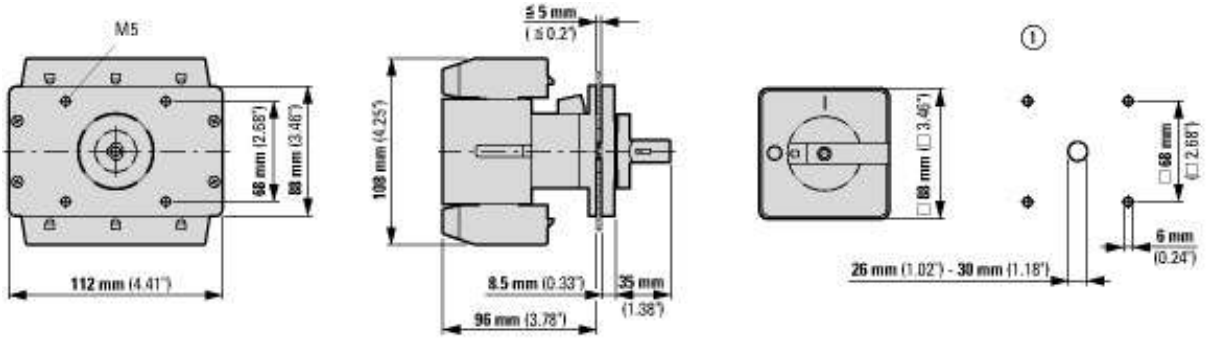


① Drilling dimensions door

## Additional product information (links)

| **IL03802010Z Cam Switch: Main switch, On-Off-switch** | |
|---|---|
| IL03802010Z Cam Switch: Main switch, On-Off-switch | ftp://ftp.moeller.net/DOCUMENTATION/AWA_INSTRUCTIONS/IL03802010Z2014_10.pdf |
| Technical overview cam switch, switch-disconnector | http://de.ecat.moeller.net/flip-cat/?edition=HPLTEv1&startpage=4.2 |
| System overview cam switch T | http://de.ecat.moeller.net/flip-cat/?edition=HPLTEv1&startpage=4.4 |
| System overview switch-disconnector P | http://de.ecat.moeller.net/flip-cat/?edition=HPLTEv1&startpage=4.6 |
| Key to part numbers Cam switch | http://de.ecat.moeller.net/flip-cat/?edition=HPLTEv1&startpage=4.8 |
| Key to part numbers Switch-disconnector | http://de.ecat.moeller.net/flip-cat/?edition=HPLTEv1&startpage=4.8 |
| Switches for ATEX Zone 22 | http://www.coopercrouse-hinds.eu/en/products/10-ex-safety-and-main-current-switches.html |


© 12/2014 by Eaton Industries GmbH