

Mounting flange

BF 5-30

- Secure fixing
- Simple mounting
- Mounting head and foot fixing may be independently rotated through 360°
- Robust construction

Universal mounting bracket for cylindrical sensors with a diameter of 5 ... 30 mm

Dimensions

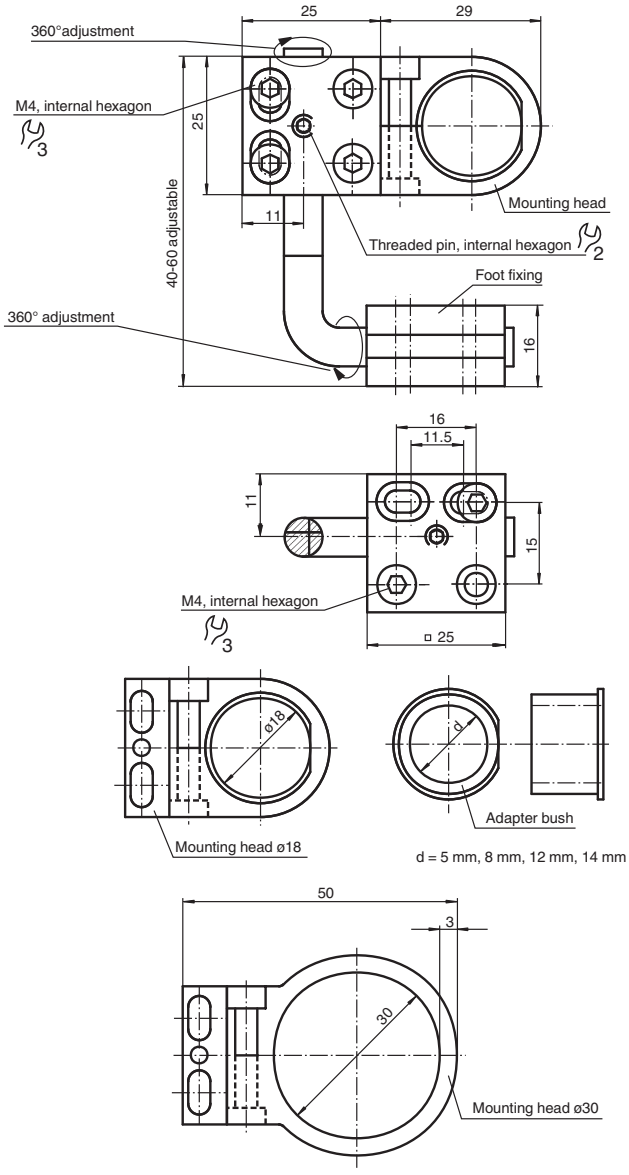

Release date: 2020-06-22 Date of issue: 2020-06-29 Filename: 091198_eng.pdf

Technical Data

Ambient conditions	
Ambient temperature	-25 ... 85 °C (-13 ... 185 °F)
Mechanical specifications	
Note	Also suited for threaded photodetectors in series KT10, GLV12, VL18, 18GM60, CP18 and GLV30.

Release date: 2020-06-22 Date of issue: 2020-06-29 Filename: 091198_eng.pdf

Scope of Delivery

The mounting adapter is supplied with 2 mounting heads (ø18 mm, ø30 mm) and 4 adapter bushes (ø5 mm, ø8 mm, ø12 mm, ø14 mm).

Release date: 2020-06-22 Date of issue: 2020-06-29 Filename: 091198_eng.pdf