213177
INS-M08-B02PS-T3
Inductive proximity sensor

- Double switching distance
- Metal connector M8
- Short-circuit protection
- LED switching status display
- High protection type



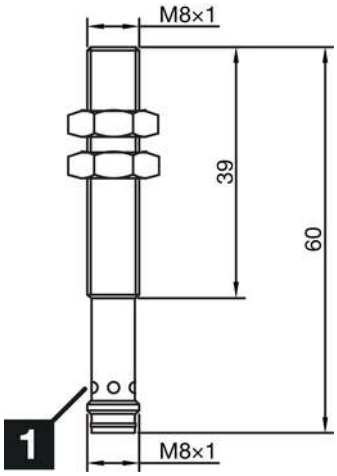

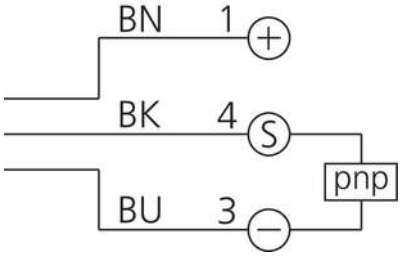

BK: black BN: brown BU: blue

Function

Technical data (typ.)	+20°C, 24 V DC
Service voltage	10 … 30 V DC
Internal power consumption	10 mA
Insulation voltage endurance	< 500 V DC
Installation type	Flush
Thread	M8 x 1
Housing length	60 mm
Housing material	Stainless steel (V2A)
Protection class	III, operation on protective low voltage
Operating principle	inductive
Evaluation	digital
Design	Thread
Characteristics	Double switching distance
Product series	INS-200 Standard 2-SN
Switching output	pnp, 200 mA, NO
Voltage drop (max.)	1.5 V DC
Switching distance (SN)	2 mm
Standardized measuring plate	8 x 8 x 1 mm
Switching hysteresis (max.)	< 10 %
LED Anzeige	Yes
Switching frequency	2000 Hz

213177
INS-M08-B02PS-T3
Inductive proximity sensor

Technical data (typ.)	+20°C, 24 V DC
Ambient temperature during operation	-25 … +70 °C
Protection type	IP 67
Connection	Connector, M8, 3-pin, A-coded

More information / accessories	https://www.di-soric.com/213177

© di-soric . Right to change reserved