Type: LR44/3

Logic Relay[1] - 3 Outputs

Terminal Protection to IP20



Dims: to DIN 43880
W. 44mm

- Designed to balance the operation between motors, compressors, generators, etc
- "Help" function (allows 2nd and 3rd relay to energise if required)
- Microprocessor based
- Isolated power supply with wide auxiliary operating supply voltage - 100 – 230V AC/DC
- Accepts up to 3, Voltage-free, N.O. contacts (i.e. pressure switches, relay contacts)
- Indicates error if inputs are applied in alternative sequence
- 3 x SPNO relay outputs 5A
- Green LED indication for supply status
- Individual Red LED indication for relay status
- Compact 44mm DIN Rail housing
- Other logic/switching patterns available on request[2]
- Can replace existing M3LS3

ISO 9001:2015
Cert. No. 14125771

[1] Also known as "Load Sharing Relay", "Alternating Relay" or "Flip Flop Relay"

FUNCTION DIAGRAM [2]

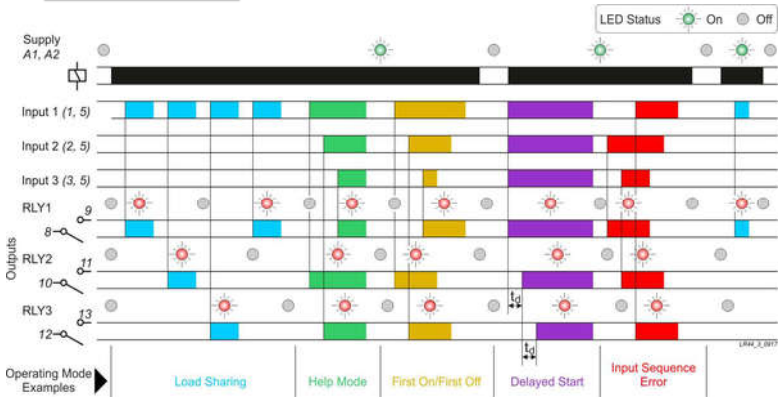

INSTALLATION AND OPERATION

Installation work must be carried out by qualified personnel.

- BEFORE INSTALLATION, ISOLATE THE SUPPLY.
- Connect the unit as shown in the diagram below and ensure the voltage of the supply to be connected to terminals "6" and "7" is within the voltage rating of this product.
- Connect the external contact for "Input 1" across terminals "1" and "5, "Input 2" across terminals "2" and "5" and "Input 3" across terminals "3" and "5".
- The connections to the Output Relays (shown as "RLY1", "RLY2" and "RLY3") should be wired according to the external load they are controlling/switching.
- Note that the LED's correspond to the Relay Outputs as follows: "Output 1" LED = "RLY1" status, "Output 2" LED = "RLY2" status and "Output 3" LED = "RLY3" status.

Applying power.

- Apply power and the green "Power supply" ❹ LED will illuminate.
- If the external contacts are open the three red "Output 1" ❶/"Output 2" ❷/"Output 3" ❸ LED's will remain extinguished.

Operating the unit (with power applied).

- Close the external contact connected to "Input 1" and "RLY1" will energise and corresponding red LED ❶ illuminate. Open the contact and "RLY1" will de-energise and red LED extinguish.
- Close the same contact again and now "RLY2" will energise and corresponding red LED ❷ will illuminate. Open the contact and "RLY2" will de-energise and red LED extinguish.
- Close the same contact for a third time and now the "RLY3" will energise and corresponding red LED ❸ will illuminate. Open the contact and "RLY3" will de-energise and red LED extinguish.
- Next time "Input 1" contact is closed, "RLY1" will re-energise and the sequence between the relays will continue.

"Help" function/feature

- With one of the external contacts already closed and output relay energised, closing the second (or third) external contacts will energise the other relays. This allows loads to run simultaneously if required. Additionally, if two inputs close simultaneously, there is a 1 second delay (t_d) in between the other relays energising.

Troubleshooting

If the unit fails to operate correctly or as described, check the wiring is correct, supply voltage is present and within the operating limits specified. Please also see additional note in the Technical Specification column on the right.

TECHNICAL SPECIFICATION

Aux. Supply voltage Us **(6, 7):**	100 – 230V AC/DC	
Frequency range:	48 – 63Hz (AC supplies)	
Supply variation:	85 – 115% of Us	
Power consumption (max.):	3VA	
Pollution degree:	2	
Overvoltage category:	III (IEC 60664)	
Rated impulse withstand voltage:	4kV (1.2/50µS) IEC 60664	
No. of Monitored inputs **(1, 2, 3, 5):**	3	
Max. cable length:	50m (relay to external contacts)	
Typical response times:		
To relay energising	< 1s	
To relay de-energising	< 1s	
Time delay (t_d):	1s	
Reset time:	380ms max.	
Repeat accuracy:	0.5% @ constant conditions	
Power on indication:	Green LED	
Relay status indication:	Red LED x3	
Ambient temperature:	-20 to +60°C	
Relative humidity:	+95% max.	
Output:		
RLY1 **(8, 9)**:	SPNO	
RLY2 **(10, 11)**:	SPNO	
RLY3 **(12, 13)**:	SPNO	
Output rating (all relays):	AC1	250V 5A (1250VA)
	AC15	250V 2A
	DC1	30V 3A (90W)
Electrical life:	≥ 150,000 ops at rated load	
Dielectric voltage:	2kV AC (rms) IEC 60947-1	
Rated impulse withstand voltage:	4kV (1.2/50µS) IEC 60664	
Housing:	Grey flame retardant Lexan UL94 V0	
Weight:	125g	
Mounting option:	On to 35mm symmetric DIN rail to BS EN 60715	
Terminal conductor size:	≤ 2 x 2.5mm² solid or stranded	
Approvals:	Conforms to IEC. CE, and RoHS Compliant. EMC: Immunity: EN 61000-6-2 Emissions: EN 61000-6-3	

Numbers shown above in bold/within brackets refer to terminal numbers on housing.

CONNECTION DIAGRAM

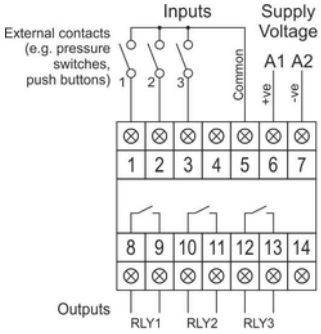

FRONT LED INDICATION

1. Output 1 status (Red) LED
2. Output 2 status (Red) LED
3. Output 3 status (Red) LED
4. Power supply status (Green) LED

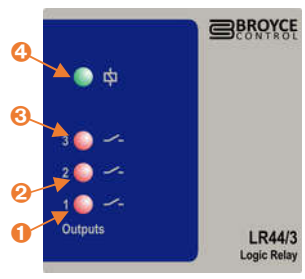

There are no user adjustments on this product

DIMENSIONS

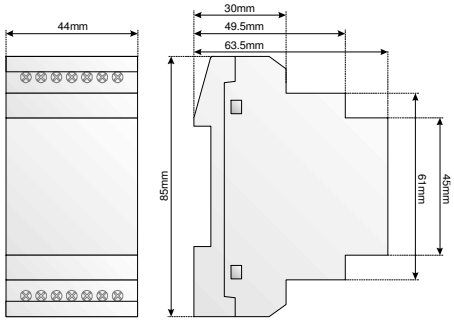

Broyce Control Ltd., Pool Street, Wolverhampton, West Midlands WV2 4HN. England
Tel: +44 (0) 1902 773746 Fax: +44 (0) 1902 420639 Email: sales@broycecontrol.com Web: www.broycecontrol.com

The Information provided in this literature is believed to be accurate (subject to change without prior notice); however, use of such information shall be entirely at the user's own risk.