Class J (Finger-Safe) Fuseholders







JT60030
JTN60030 (w/Indication)

JT60060
JTN60060 (w/Indication)

For use with Bussmann Class "J" fuses - (Bussmann LPJ, JKS)

Catalog Numbers: JT60030 and JT60060 - Non-Indicating; JTN60030 and JTN60060 - Indicating (Neon)

Construction: Thermoplastic, UL Flammability; 94VO

Voltage Ratings: 600Vac or less, 600Vdc or less

Amperage Rating: JT(N) 60030 - 30A, JT(N)60060 - 60A

Withstand Rating: 200,000A RMS Sym. (Self Certified at 300,000A using Bussmann LPJ_SP fuses)

Agency Information:

Listed to UL 512: 30 - 60A (Guide lZLT, File 14853)

CSA Certified: 30 - 60A (Class 6225-01, File 47235)

CE Mark: Molded into product

Indication: Min. voltage: 90Vac, 115 dc; Neon Lamp "ON" when fuse opens, voltage source and current path are present.

Touch Safe: IP20 per IEC 529

Terminations: Dual Port (30A) Torque 20 lb. in., Single Port (60A) Torque 45 lb. in., Terminal Construction, Tin plated Copper Alloy

Wire Size: JT(N)60030 - Rated for #18-#8; 75°C, CU only, JT(N)60060 - Rated for #14-#4; 75°C, CU only

(Note: For JT(N)60030 use both stranded or solid, in a variety of dual wire combinations of same wire size and type.)

Packaging: 12 in a carton

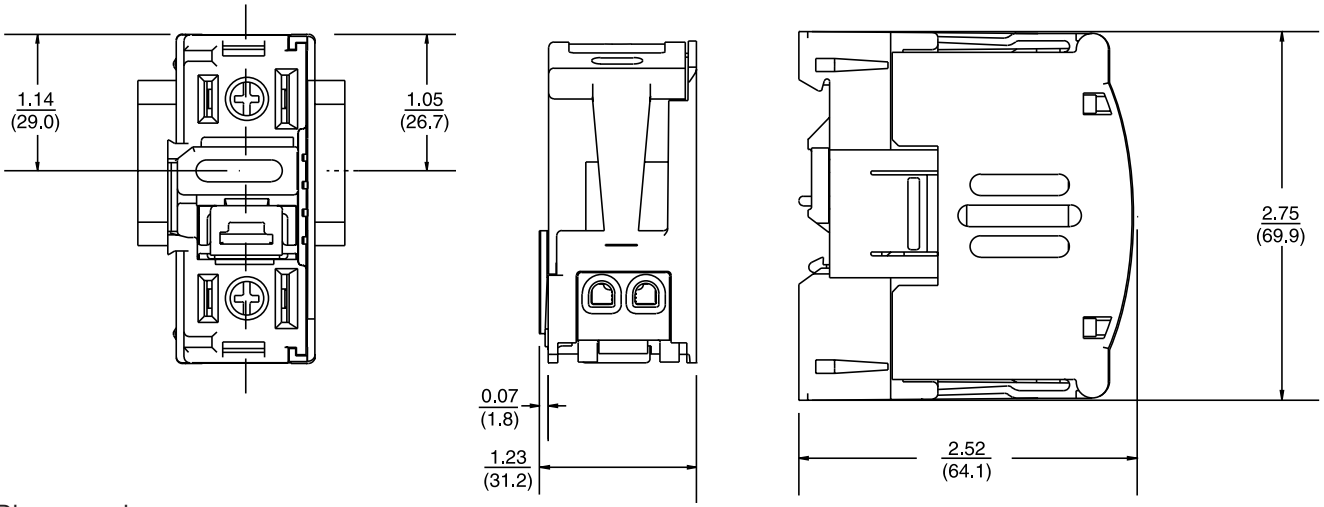

Dim. = in. / (mm.)

JT60030
JTN60030

Class J (Finger-Safe) Fuseholders



JT(N)600 Series fuseblocks can be ganged together to provide two and three pole block configurations.

JT60030 - JTN60030

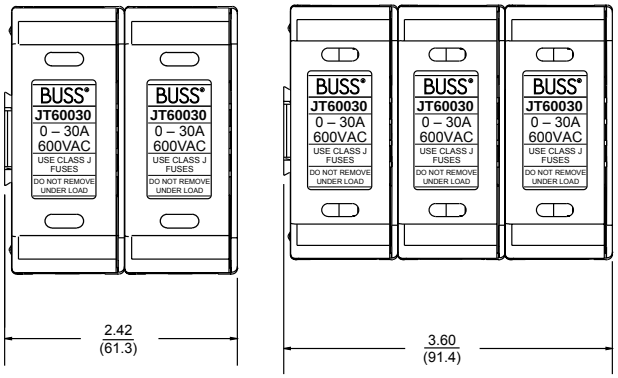

JT60060 - JTN60060

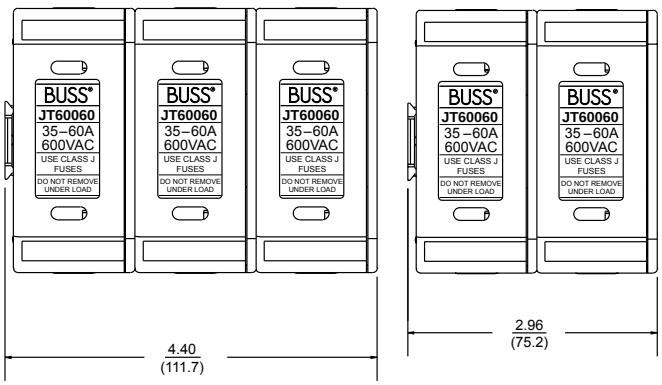

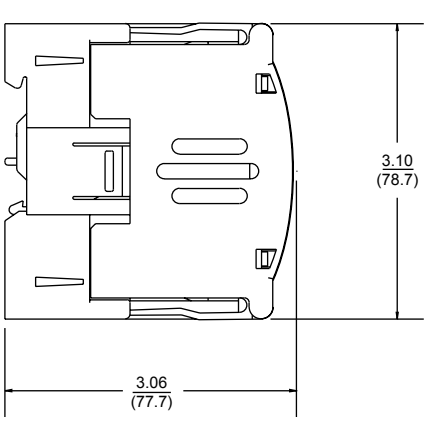

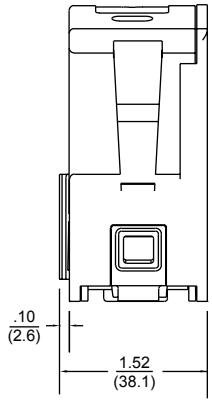

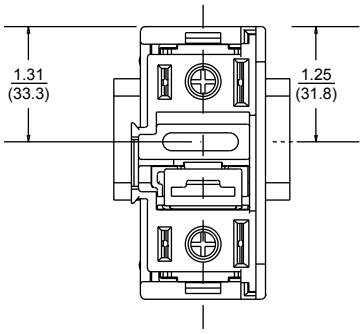

JT60060
JTN60060

Dim. = in. / (mm.)

The only controlled copy of this Data Sheet is the electronic read-only version located on the Bussmann Network Drive. All other copies of this Data Sheet are by definition uncontrolled. This bulletin is intended to clearly present comprehensive product data and provide technical information that will help the end user with design applications. Bussmann reserves the right, without notice, to change design or construction of any products and to discontinue or limit distribution of any products. Bussmann also reserves the right to change or update, without notice, any technical information contained in this bulletin. Once a product has been selected, it should be tested by the user in all possible applications.