Current Transducer IN 500-S

I_{PN} = 500 A

For the electronic measurement of current: DC, AC, pulsed..., with galvanic separation between the primary and the secondary circuit.



Features

- Closed loop (compensated) current transducer using an extremely accurate zero flux detector
- 9-pin D-Sub male secondary connector
- Status signal to indicate the transducer state
- LED indicator confirms normal operation
- Metal housing to improve immunity and EMC & power dissipation
- Operating temperature −40 °C to 85 °C
- Large aperture ⌀ 38 mm for cables and busbars.

Advantages

- Very high accuracy
- Excellent linearity
- Extremely low temperature drift
- Wide frequency bandwidth
- High immunity to external fields
- No insertion losses
- Very low noise on output signal
- Low noise feedback to primary conductor.

Applications

- Feedback element in high performance gradient amplifiers for MRI
- Feedback element in high-precision, high-stability power supplies
- Calibration unit
- Feedback element for Power Meter (e.g. EV Test Benches)
- Medical equipment.

Standards

- UL 61010-1: 2012/Rev. 2019
- UL 61010-2-030: 2017

IEC 61010-1

EMC:
- IEC 61000-6-2: 2016
- IEC 61000-6-3: 2006 + A1 (2010)

Safety:
- IEC 61010-2-030: 2017
- IEC 61010-1:2010/AMD1: 2016.

Application Domains

- Industrial
- Laboratory
- Medical.

LEM International SA
Route du Nant-d'Avril, 152
1217 Meyrin
www.lem.com



Caution

If the device is used in a way that is not specified by the manufacturer, the protection provided by the device may be compromised.
Always inspect the electronics unit and connecting cable before using this product and do not use it if damaged.
Mounting assembly shall guarantee the maximum primary conductor temperature, fulfill clearance and creepage distance, minimize electric and magnetic coupling, and unless otherwise specified can be mounted in any orientation.



Caution, risk of electrical shock

This transducer must be used in limited-energy secondary circuits SELV according to IEC 61010-1, in electric/electronic equipment with respect to applicable standards and safety requirements in accordance with the manufacturer's operating specifications.

Use caution during installation and use of this product; certain parts of the module can carry hazardous voltages and high currents (e.g. primary conductor).
Ignoring this warning can lead to injury and/or cause serious damage.
De-energize all circuits and hazardous live parts before installing the product.
All installations, servicing operations and use must be carried out by trained and qualified personnel practicing applicable safety precautions.
This transducer is a built-in device, no maintenance required; cleaning by dry compressed air is authorized.

This transducer is a build-in device, whose hazardous live parts must be inaccessible after installation.
This transducer must be mounted in a suitable end-enclosure.
Besides make sure to have a distance of minimum 30 mm between the primary conductor (return bar) and the transducer and other neighboring components.

Main supply must be able to be disconnected.
Always inspect the current transducer for damage before using this product.
Never connect or disconnect the external power supply while the primary circuit is connected to live parts.
Never connect the output to any equipment with a common mode voltage to earth greater than 30 V.
Always wear protective clothing and gloves if hazardous live parts are present in the installation where the measurement is carried out.
Safe and trouble-free operation of this transducer can only be guaranteed if transport, storage and installation are carried out correctly and are carried out with care.
The current transducer shall not be opened or modified.
If not working, the current transducer shall be replaced by an equivalent device.



ESD susceptibility
The product is susceptible to ESD damage if the secondary (D-Sub) connector pins are touched without being properly grounded.



Caution, hot surface
Power supply cable must support a temperature of 100 °C at least and it must be fixed in a way to not be in contact with the product housing and primary conductor.

Do not dispose of this product as unsorted municipal waste. Contact a qualified recycler for disposal.

c US

Underwriters Laboratory Inc. recognized component.

LEM International SA
Route du Nant-d'Avril, 152
1217 Meyrin
www.lem.com

Parameter	Symbol	Unit	Value
Maximum supply voltage (working) (−40 … 85 °C)	$\pm U_{C\ max}$	V	16.5
Maximum primary conductor temperature	$T_{B\ max}$	°C	100

Absolute maximum ratings apply at 25 °C unless otherwise noted.
Stresses above these ratings may cause permanent damage.
Exposure to absolute maximum ratings for extended periods may degrade reliability.

UL 61010: Standards and marking

File # E330077- Vol. 2.

Standards

- UL 61010-1: 2012 Revised July, 2019 (Third Edition)/ CAN/CSA-C22.2 No. 61010-1(2012-05)
- UL 61010-2-030: 2017 (Second Edition).

Marking

Only those products bearing the UL or UR Mark should be considered to be Listed or Recognized and covered under UL's Follow-Up Service. Always look for the Mark on the product.

Environmental and mechanical characteristics

Parameter	Symbol	Unit	Min	Typ	Max	Comment
Ambient operating temperature	T_A	°C	−40		85	
Ambient storage temperature	$T_{A\ st}$	°C	−40		85	
Relative humidity	RH	%	20		80	Non condensing
Dimensions						See drawing on page 10
Mass	m	kg		1.3		
Altitude [1]		m			2000	
Environmental conditions						Indoor
Cooling conditions						Natural convection
Degree of protection against mechanical impacts				IK 08		With busbar completely filling the aperture

Insulation coordination

Parameter	Symbol	Unit	Value	Comment
RMS voltage for AC insulation test, 50 Hz, 1 min	U_d	kV	4.2	Between primary and secondary + shield
Impulse withstand voltage 1.2/50 µs	U_{Ni}	kV	8	
Clearance (pri. - sec.) [2]	d_{Cl}	mm	11.5	Shortest distance through air
Creepage distance (pri. - sec.) [2]	d_{Cp}	mm	11.9	Shortest path along device body
Comparative tracking index	CTI		600	
Rated insulation RMS voltage	U_{Nm}	V	1000	Basic insulation according to IEC 61010-1 CAT III, PD2
Rated insulation RMS voltage			1000	Reinforced insulation according to IEC 61010-1 CAT II, PD2

Notes: [1] Insulation coordination at 2000 m
[2] Mating connector not included in this calculation, which can degrade Clearance and Creepage distance depending on the material and dimensions of said mating connector.

LEM International SA
Route du Nant-d'Avril, 152
1217 Meyrin
www.lem.com

Electrical data

At T_A = 25 °C, $\pm U_C$ = ±15 V DC, unless otherwise noted (see Min, Max, typ, definition paragraph in page 5).

Parameter	Symbol	Unit	Min	Typ	Max	Comment
Primary nominal DC current (continuous)	$I_{PN\,DC}$	A	−500		500	T_A = −40 ... 85 °C
Primary nominal AC RMS current (continuous)	$I_{PN\,AC}$	A	−500		500	T_A = −40 ... 85 °C;
Peak primary current, measuring range	$\hat{I}_{PM}$	A	−800		800	With $\pm U_C$ = 14.25 V, T_A = −40 ... 85 °C, R_M = 2.5 Ω;
Measuring resistance	R_M	Ω	0		2.5	for other values see curves page 7
Secondary nominal RMS current	I_{SN}	A	≈ −0.667		≈ 0.667	
Maximum withstand primary peak current [1]	$\hat{I}_{P\,max}$	kA	−5		5	Non repetitive pulse 100 ms
Resistance of secondary winding	R_S	Ω		6.5		@ 25 °C
Number of secondary turns	N_S			750		
DC supply voltage ⎓	$+U_C$	V	14.25	15	15.75	
DC supply voltage ⎓	$-U_C$	V	−14.25	−15	−15.75	
DC current consumption ⎓	$+I_C$	A		0.12		@ I_P = 0
				0.79		@ I_P = I_{PN}
				1.19		@ I_P = I_{PM}
DC current consumption ⎓	$-I_C$	A		0.07		@ I_P = 0
				0.74		@ I_P = I_{PN}
				1.14		@ I_P = I_{PM}
RMS noise current 0 ... 10 Hz referred to primary [2]	I_{no}	ppm		0.05	0.1	
RMS noise current 0 ... 10 kHz referred to primary [2]				1.5	4	
RMS noise current 0 ... 100 kHz referred to primary [2]				3.5	10	
Peak-to-peak noise current [2]	$I_{no\,pp}$	ppm		18	34	
Fluxgate excitation frequency		kHz		15.625		T_A = −40 ... 85 °C
Electrical offset current referred to primary [2]	I_{OE}	ppm	−10		10	@ 25 °C
Temperature coefficient of I_{OE} referred to primary [2]	TCI_{OE}	ppm/K	−0.2	0.05	0.2	T_A = −40 ... 85 °C
Offset stability [2]		ppm/month	−0.2		0.2	
Linearity error [2]	ε_L	ppm	−1.5	0.8	1.5	
			−3	1	3	T_A = −40 ... 85 °C
Delay time to 10 % of the final output value for I_{PN} step	$t_{D\,10}$	µs			< 1	
Delay time to 90 % of the final output value for I_{PN} step	$t_{D\,90}$	µs			< 1	di/dt of 100 A/µs
Frequency bandwidth (±1 dB)	BW	kHz		400		Small-signal bandwidth, 1.5 % of I_{PN}
Frequency bandwidth (±3 dB)				520		
Start-up time	t_{start}	s			< 15	T_A = −40 ... 85 °C

Notes: [1] Single pulse only, not AC. The transducer may require a few seconds to return to normal operation when autoreset system is running;
[2] All ppm figures refer to full-scale which corresponds to a secondary nominal RMS current.

LEM International SA
Route du Nant-d'Avril, 152
1217 Meyrin
www.lem.com

Definition of typical, minimum and maximum values

Minimum and maximum values for specified limiting and safety conditions have to be understood as such as well as values shown in “typical” graphs.
On the other hand, measured values are part of a statistical distribution that can be specified by an interval with upper and lower limits and a probability for measured values to lie within this interval.
Unless otherwise stated (e.g. “100 % tested”), the LEM definition for such intervals designated with “min” and “max” is that the probability for values of samples to lie in this interval is 99.73 %.
For a normal (Gaussian) distribution, this corresponds to an interval between −3 sigma and +3 sigma. If “typical” values are not obviously mean or average values, those values are defined to delimit intervals with a probability of 68.27 %, corresponding to an interval between −sigma and +sigma for a normal distribution.

Typical, maximal and minimal values are determined during the initial characterization of the product.

Power supply and load

In order to reach the measuring range according to the maximum measuring resistor, be careful with the setup measurement when wires length are high. It means that:

- the wires resistance could be not negligible
- the voltage at the output of the DC power supply and the voltage at the transducer could be significantly different.

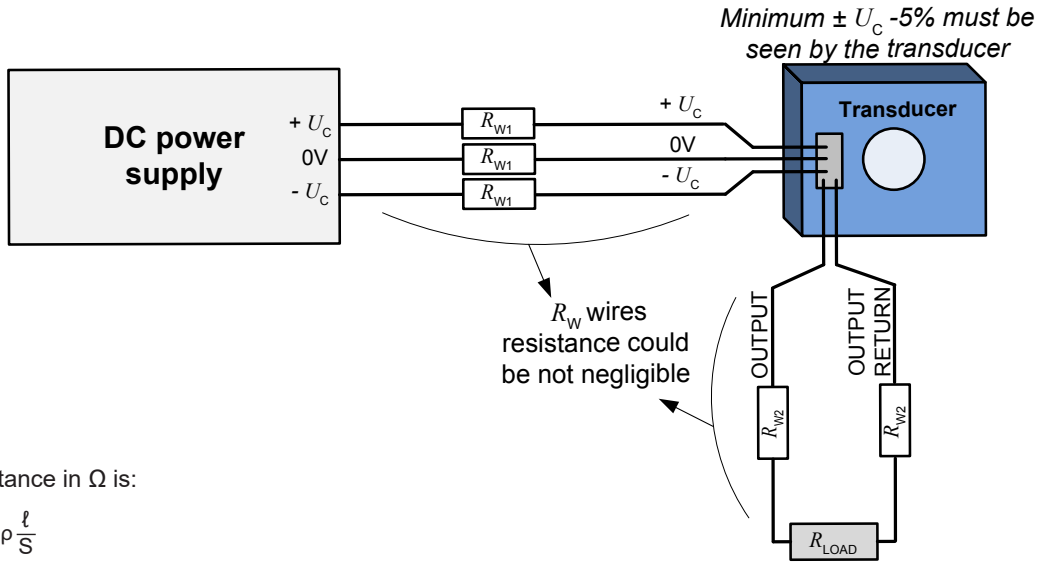

R_W wire resistance in Ω is:

$$R_W = \rho \frac{\ell}{S}$$

S: Cross section of wire in m^2
ℓ: Wire length in m
ρ: Resistivity of material in Ω.m

Total measuring resistance is:

$R_M = R_L + 2 \times R_{W1} + 2 \times R_{W2}$

If $R_{W1} = R_{W2} = R_{WIRE}$ then $R_M = R_L + 4 \times R_{WIRE}$

LEM International SA
Route du Nant-d'Avril, 152
1217 Meyrin
www.lem.com

Overload protection - Electrical specification - Status

The overload occurs when the primary current I_P exceeds a trip level such that the fluxgate detector becomes completely saturated and, consequently, the transducer will switch from normal operation to overload mode.
This trip level is guaranteed to be greater than I_{PM} and its actual value depends on operating conditions such as temperature and measuring resistance.
When this happens, the transducer will automatically begin to sweep in order to lock on the primary current again.

The overload conditions will be:

- The secondary current I_S generated is a low frequency signal.
- The signal normal operation status (between pin 3 and 8 of the D-sub connector) switches to $U+$ or ≈ 0.7 V.
  See the status port wiring below.
- The green LED indicator (normal operation status) turns off.

The measuring can resume when the primary current returns in the measuring range between $-I_{PN}$ and $+I_{PN}$. Then the signal normal operation status switches to GND and the green LED indicator (normal operation status) switches on.

Status/Interlock port wiring

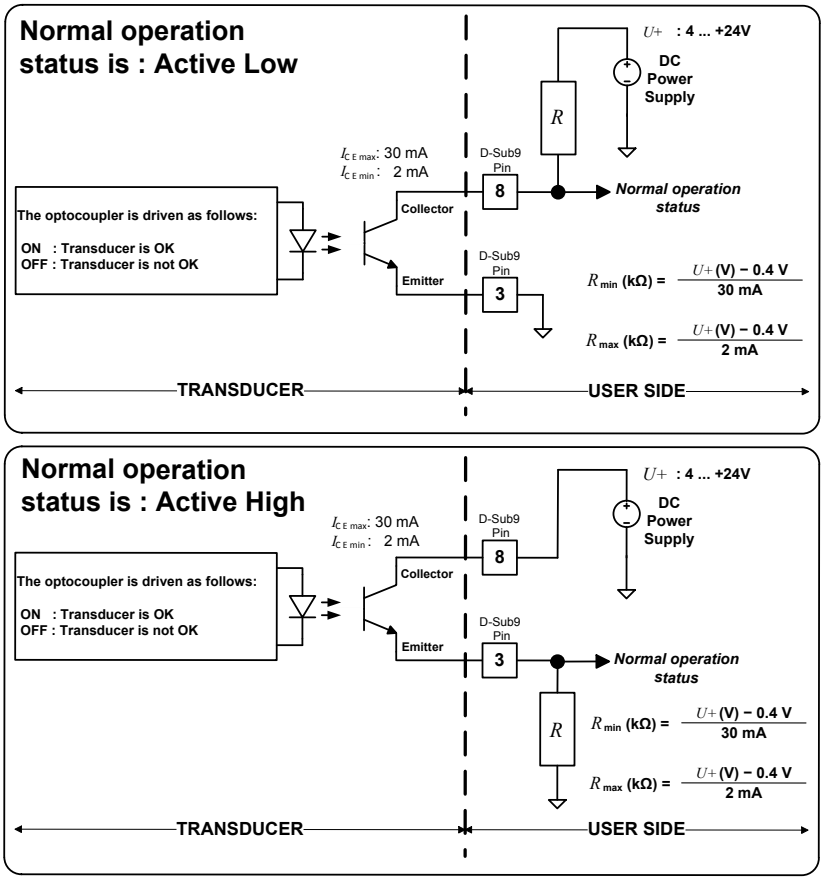

The following table shows how the normal operation status acts as below:

Status	Value	Description
Active Low	≈ 0.7 V	The transducer is OK (Normal operation)
	$U+$	The transducer is not OK (Overload mode or supply fault)
Active High	$U+$	The transducer is OK (Normal operation)
	≈ 0.7 V	The transducer is not OK (Overload mode or supply fault)

LEM International SA
Route du Nant-d'Avril, 152
1217 Meyrin
www.lem.com

Maximum measuring resistance versus primary current and temperature

$\pm U_C$ = ±14.25 V

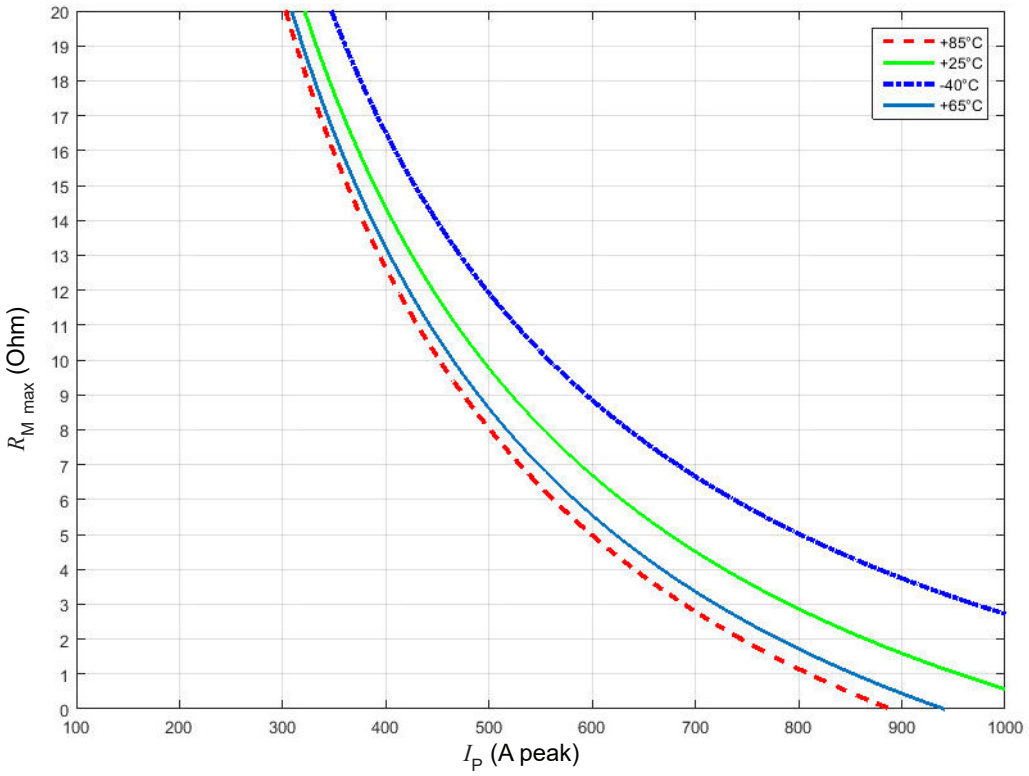

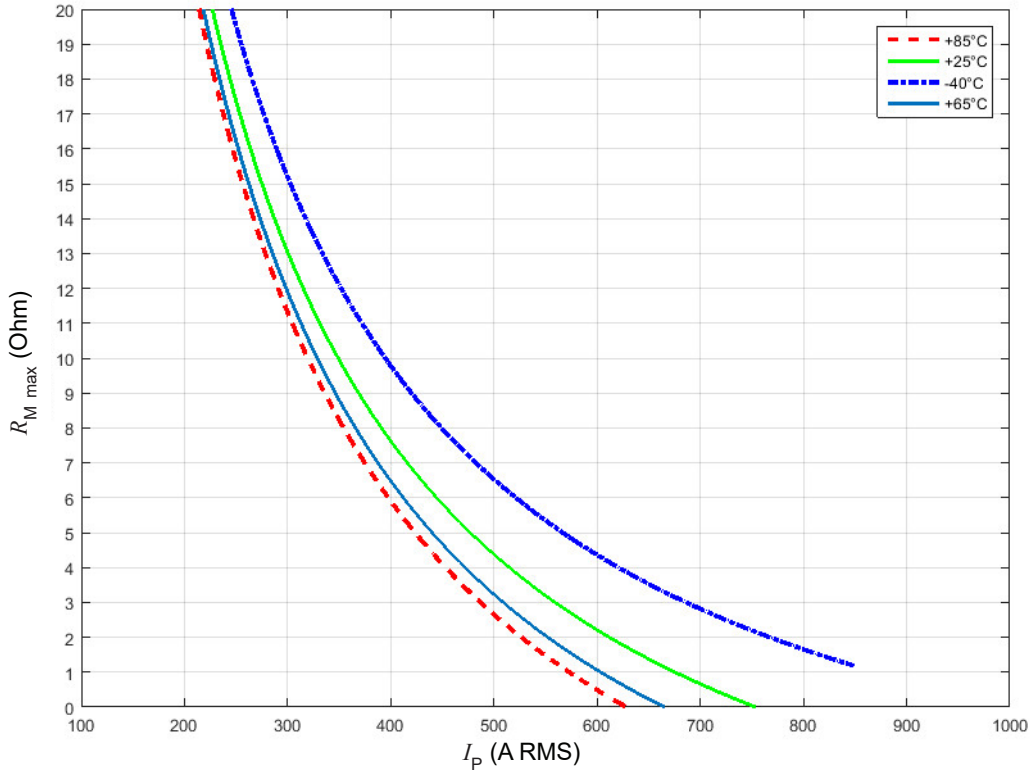

LEM International SA
Route du Nant-d'Avril, 152
1217 Meyrin
www.lem.com

The schematic used to measure all electrical parameters is shown below:

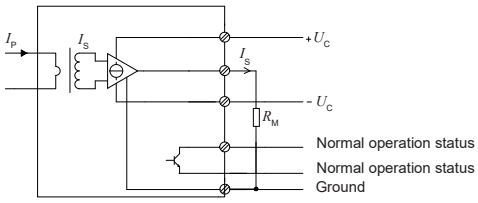

Ampere-turns and amperes

The transducer is sensitive to the primary current linkage Θ_P (also called ampere-turns).

$$\Theta_P = N_P \cdot I_P$$

Where N_P is the number of primary turn (depending on the connection of the primary jumpers).

Caution: As most applications will use the transducer with only one single primary turn (N_P = 1), much of this datasheet is written in terms of primary current instead of current linkages. However, the ampere-turns (A) unit is used to emphasis that current linkages are intended and applicable.

Simplified transducer model

The static model of the transducer with current output at temperature T_A is:

$$I_S = S \cdot \Theta_P \cdot (1 + \varepsilon)$$

In which (referred to primary):

$$\varepsilon \cdot \Theta_P = I_{OE} + I_{OT} + \varepsilon_S \cdot \Theta_P + \varepsilon_{ST} \cdot \Theta_P + \varepsilon_L(\Theta_{P\,max}) \cdot \Theta_{P\,max} + I_{OM}$$

$\Theta_P = N_P \cdot I_P$: primary current linkage (A)
$\Theta_{P\,max}$: maximum primary current linkage applied to the transducer
I_S : secondary current (A)
S : sensitivity of the transducer
T_A : ambient operating temperature (°C)
I_{OE} : electrical offset current (A)
I_{OM} : magnetic offset current (A)
I_{OT} : temperature variation of I_{OE} (A)
ε_S : sensitivity error at 25 °C
ε_{ST} : thermal drift of S
$\varepsilon_L(\Theta_{P\,max})$: linearity error for $\Theta_{P\,max}$

This model is valid for primary ampere-turns Θ_P between $-\Theta_{P\,max}$ and $+\Theta_{P\,max}$ only.

This is the absolute maximum error. As all errors are independent, a more realistic way to calculate the error would be to use the following formula:

$$\varepsilon = \sqrt{\sum_{i=1}^{N} \varepsilon_i^2}$$

Total error referred to primary

The total error ε_{tot} is the error at $\pm I_{PN}$, relative to the rated value I_{PN}.

It includes all errors mentioned above

- the electrical offset I_{OE}
- the magnetic offset I_{OM}
- the sensitivity error ε_S
- the linearity error ε_L (to I_{PN}).

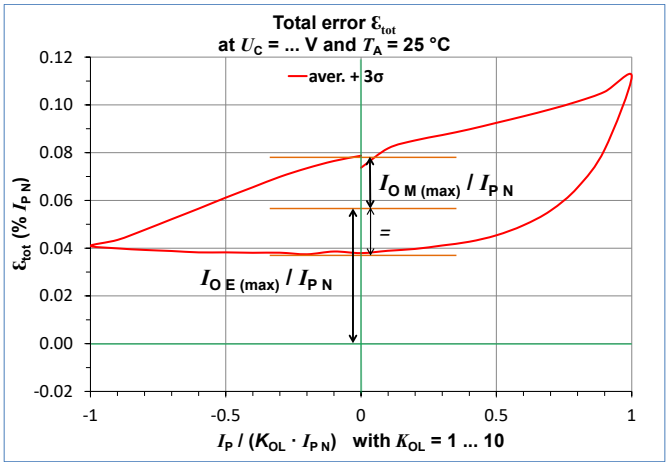

Figure 1: Total error ε_{tot}

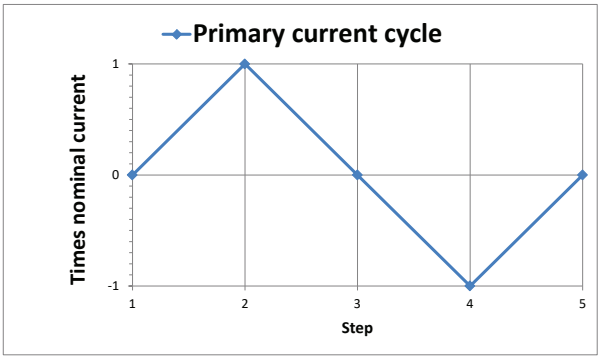

Figure 2: Current cycle used to measure magnetic and electrical offset (transducer supplied)

Electrical offset referred to primary

Using the current cycle shown in figure 2, the electrical offset current I_{OE} is the residual output referred to primary when the input current is zero.

$$I_{OE} = \frac{I_{P\,(3)} + I_{P\,(5)}}{2}$$

The temperature variation I_{OT} of the electrical offset current I_{OE} is the variation of the electrical offset from 25 °C to the considered temperature.

$$I_{OT}(T) = I_{OE}(T) - I_{OE}(25°C)$$

LEM International SA
Route du Nant-d'Avril, 152
1217 Meyrin
www.lem.com

Performance parameters definition

Sensitivity and linearity

To measure sensitivity and linearity, the primary current (DC) is cycled from 0 to I_P, then to $-I_P$ and back to 0 (equally spaced $I_P/10$ steps). The sensitivity S is defined as the slope of the linear regression line for a cycle between $\pm I_{P\,N}$.
The linearity error ε_L is the maximum positive or negative difference between the measured points and the linear regression line, expressed in % of $I_{P\,N}$.

Delay times

The delay time $t_{D\,10}$ @ 10 % and the delay time $t_{D\,90}$ @ 90 % with respect to the primary are shown in the next figure.
Both slightly depend on the primary current di/dt.
They are measured at nominal current.

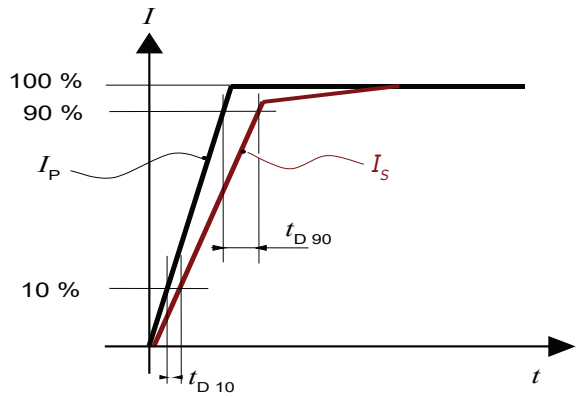

Figure 3: $t_{D\,10}$ (delay time @ 10 %) and $t_{D\,90}$ (delay time)

LEM International SA
Route du Nant-d'Avril, 152
1217 Meyrin
www.lem.com

Dimensions (in mm)

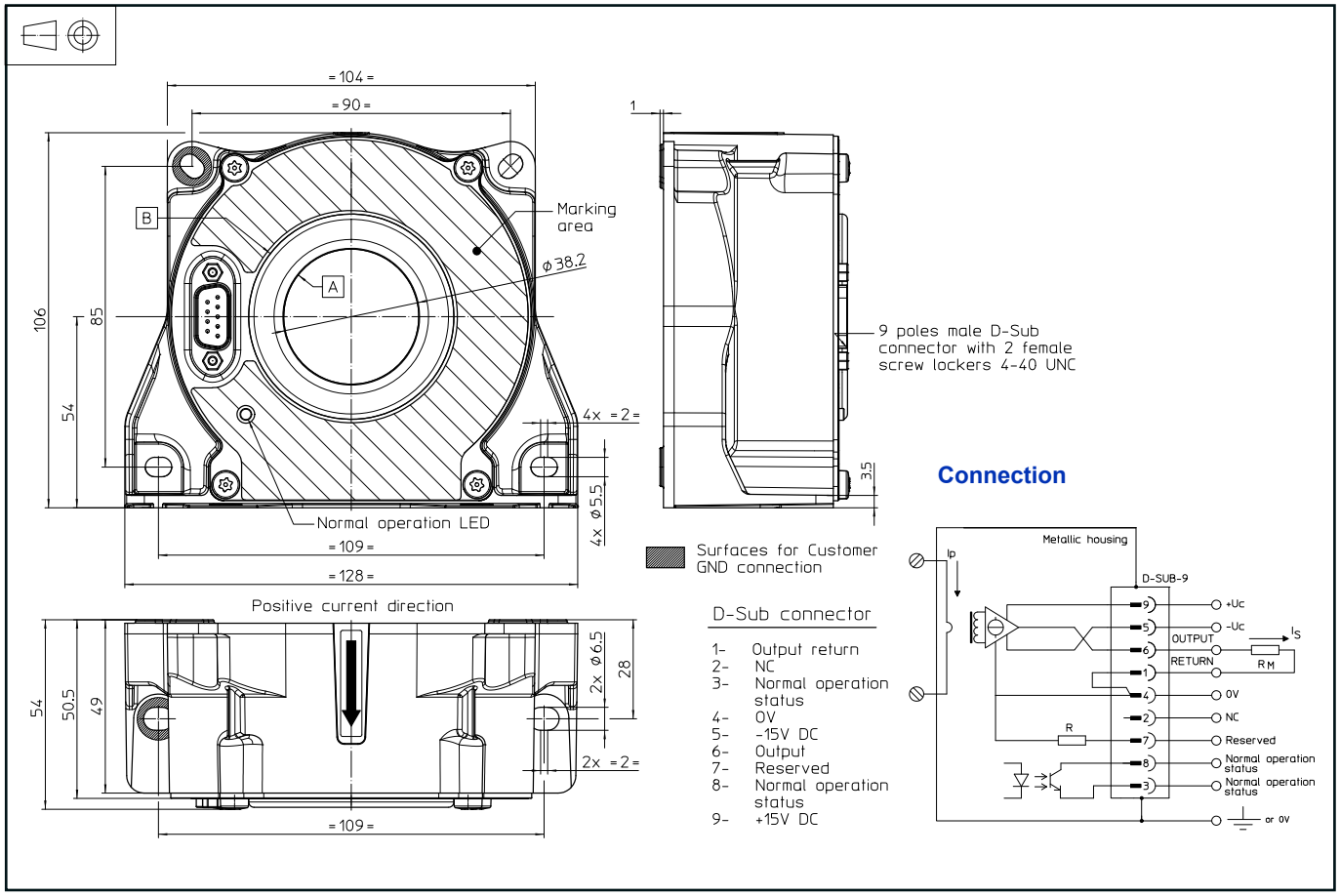

Connection

- Normal operation status (Pins 3 and 8)
  Normal operation means:
  - ±15 V (±U_C) present
  - 0 V on D-Sub has to be tied
  - zero detector is working
  - compensation current ≤ $I_{PM\ DC}$
  - green LED indicator switches on.
- Direct current ⎓ (DC)

Mechanical characteristics

• General tolerance	±0.5 mm
• Transducer fastening	
- Horizontal mounting	4 slotted holes Ø 5.5 mm 4 M5 steel screws
Recommended fastening torque	3.7 N·m
- Vertical mounting	2 slotted holes Ø 6.5 mm 2 M6 steel screws
Recommended fastening torque	4.4 N·m
• Connection of secondary	on D-Sub-9, UNC 4-40
Manual tightening until full stop	

Remarks

- I_S is positive when I_P flows in the direction of the arrow.
- We recommend that a shielded output cable and plug are used to ensure the maximum immunity against electrostatic fields.
- Temperature of the primary conductor should not exceed 100 °C.
- We recommend to fix the potential of the housing to the ground or 0 V (on indicated surfaces).
- Installation of the transducer must be done unless otherwise specified on the datasheet, according to LEM Transducer Generic Mounting Rules. Please refer to LEM document N°ANE120504 available on our Web site: https://www.lem.com/en/file/3137/download
- All mounting recommendations are given for a standard mounting. Screws with flat and spring washers.

4August2025/Version 4 (Public datasheet)

LEM International SA
Route du Nant-d'Avril, 152
1217 Meyrin
www.lem.com

IMPORTANT NOTICE

The information in this document is considered accurate and reliable. However, LEM International SA and any company directly or indirectly controlled by LEM Holding SA (“LEM”) do not provide any guarantee or warranty, expressed or implied, regarding the accuracy or completeness of this information and are not liable for any consequences resulting from its use. LEM shall not be responsible for any indirect, incidental, punitive, special, or consequential damages (including, but not limited to, lost profits, lost savings, business interruption, costs related to the removal or replacement of products, or rework charges) regardless of whether such damages arise from tort (including negligence), warranty, breach of contract, or any other legal theory.

LEM reserves the right to update the information in this document, including specifications and product descriptions, at any time without prior notice. Information in this document replaces any previous versions of this document. No license to any intellectual property is granted by LEM through this document, either explicitly or implicitly. Any Information and product described herein is subject to export control regulations.

LEM products may possess either unidentified or documented vulnerabilities. It is the sole responsibility of the purchaser to design and operate their applications and products in a manner that mitigates the impact of these vulnerabilities. LEM disclaims any liability for such vulnerabilities. Customers must select products with security features that best comply with applicable rules, regulations, and standards for their intended use. The purchaser is responsible for making final design decisions regarding its products and for ensuring compliance with all legal, regulatory, and security-related requirements, irrespective of any information or support provided by LEM.

LEM products are not intended, authorized, or warranted for use in life support, life-critical, or safety-critical systems or equipment, nor in applications where failure or malfunction of an LEM product could result in personal injury, death, or significant property or environmental damage. LEM and its suppliers do not assume liability for the inclusion and/or use of LEM products in such equipment or applications; thus, this inclusion and/or use is at the purchaser’s own and sole risk. Unless explicitly stated that a specific LEM product is automotive qualified, it should not be used in automotive applications. LEM does not accept liability for the inclusion and/or use of non-automotive qualified products in automotive equipment or applications.

Applications that are described herein are for illustrative purposes only. LEM makes no representation or warranty that LEM products will be suitable for a particular purpose, a specified use or application. The purchaser is solely responsible for the design and operation of its applications and devices using LEM products, and LEM accepts no liability for any assistance with any application or purchaser product design. It is purchaser’s sole responsibility to determine whether the LEM product is suitable and fit for the purchaser’s applications and products planned, as well as for the planned application and use of purchaser’s third-party customer(s).

Stressing and using LEM products at or above limiting values will cause permanent damage to the LEM product and potentially to any device embedding or operating with LEM product. Limiting values are stress ratings only and operation of the LEM product at or above conditions and limits given in this document is not warranted. Continuous or repeated exposure to limiting values will permanently and irreversibly affect the quality and reliability of the LEM product.

LEM products are sold subject to the general terms and conditions of commercial sale, as published at www.lem.com unless otherwise agreed in a specific written agreement. LEM hereby expressly rejects the purchaser’s general terms and conditions for purchasing LEM products by purchaser. Any terms and conditions contained in any document issued by the purchaser either before or after issuance of any document by LEM containing or referring to the general terms and conditions of sale are explicitly rejected and disregarded by LEM, and the document issued by the purchaser is wholly inapplicable to any sale or licensing made by LEM and is not binding in any way on LEM.

© 2025 LEM INTERNATIONAL SA – All rights reserved

LEM International SA
Route du Nant-d’Avril, 152
1217 Meyrin
www.lem.com