MOFLASH SIGNALLING

INSTALLATION INFORMATION

PLEASE READ PRIOR TO INSTALLATION



LED401/400 Series

VISUAL SIGNALLING DEVICE

S00436 - ISSUE 1

EN Translations & Documentation, scan **QR Code**
FR Traductions & Documentation, scannez le **QR Code**
DE Übersetzungen & Dokumentation, **QR-Code** scannen
IT Traduzioni & Documentazione, scansionare il **QR code**
ES Traducciones & Documentación, escanear **QR code**

APPROVALS AND CONFORMITIES

www.moflash.com

technical@moflash.co.uk

General Installation Notes

- Installation must be carried out in accordance with the latest codes and regulations by a qualified electrician.
- Ensure power is disconnected prior to installation or maintenance to avoid danger of electrical shock.
- Environmental exposure conditions during installation should be dry. Moist or wet conditions should be avoided.
- The Lens of the product is Polycarbonate plastic. Do not clean with petroleum-based cleaners.
- For all installations, mount the Beacon ensuring the Lens is above the Base. Any other mounting positions will impair the IP Rating (Ingress Protection) of the Beacon.
- Avoid mounting the Beacon where it will be subjected to excessive vibration.

Installation Instructions

Carefully twist the Lens firmly one turn clockwise to remove it from the Base.

Please Note: Connections to this unit can be made either into the three-way Terminal Block located in the base of the unit (standard connection) **(Diagram 1 & 2)** or via the M20 side conduit entry **(Diagram 3 & 4)**

If the M20 side conduit entry is the preferred method, then the two wires in the three-way Terminal Block in the base of the unit need to be unscrewed and freed from the Terminal Block.

Unscrew the 3 x No:4 screws that retain the base plate and carefully remove, threading the two wires through the aperture.

Now unscrew the same two wires from the internal Terminal Block located on the PCB.

Carefully drill out the M20 conduit knockout and using a suitably rated Cable Gland, insert power cable into the unit making the necessary connections to the internal Terminal Block on the PCB.

Now screw the base plate back into position on the Base with the three screws removed earlier.

Affix the Base to the required surface utilising the sealing gasket (supplied) with 3 x M6 Hex set screws (not supplied).

The output signal required now needs to be set using the two-way DIP Switch located on the PCB. Please see diagram below showing switch locations:

Please note, the product is factory pre-set to Flash.

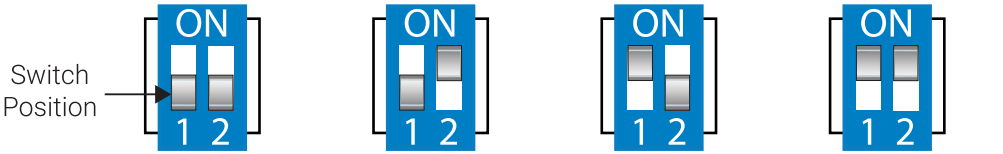

Static/Steady Rotating: 1 Column Flashing Rotating: 2 Column

Locate the Lens back onto the Base ensuring that the Base 'O' Ring is positioned correctly. Twist the Lens one turn anticlockwise to lock the Lens in place.

Cabling Details

- Maximum 2.5mm^2 (14 – 22 AWG) stranded core with 4mm cut back.

Wiring Diagram

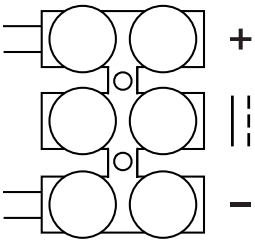

Wiring Diagram 1 (DC)

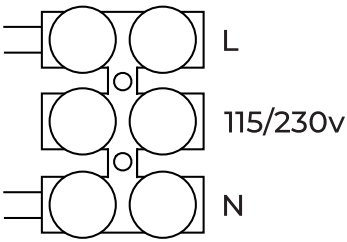

Wiring Diagram 2 (AC)

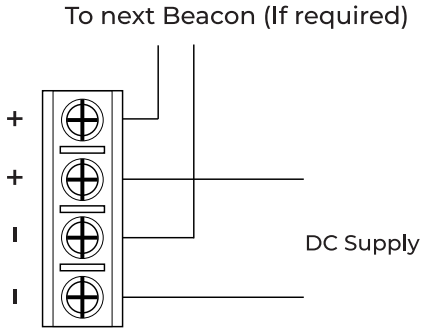

Wiring Diagram 3 (DC)

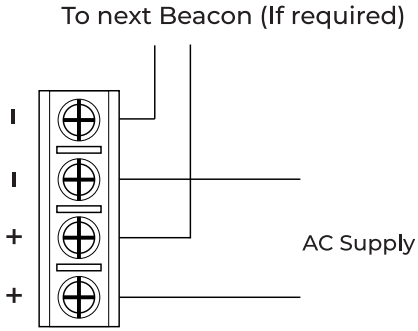

Wiring Diagram 4 (AC)

Moflash Signalling Limited accepts no liability for any consequences following use of this document. Any technical specifications and products referred to within this document are subject to change without notice due to continual improvement and product development policies. All dB(A) figures are subject to environmental conditions. The units are sold under Moflash standard conditions of sale, available on request. Additional resources, including installation sheet translations, certificates and DoCs are available from the **www.moflash.co.uk** website**.**