REM-E-195T10S-IOL32B-H1141
Absolute Rotary Encoder - Multiturn – IO-Link Efficiency Line

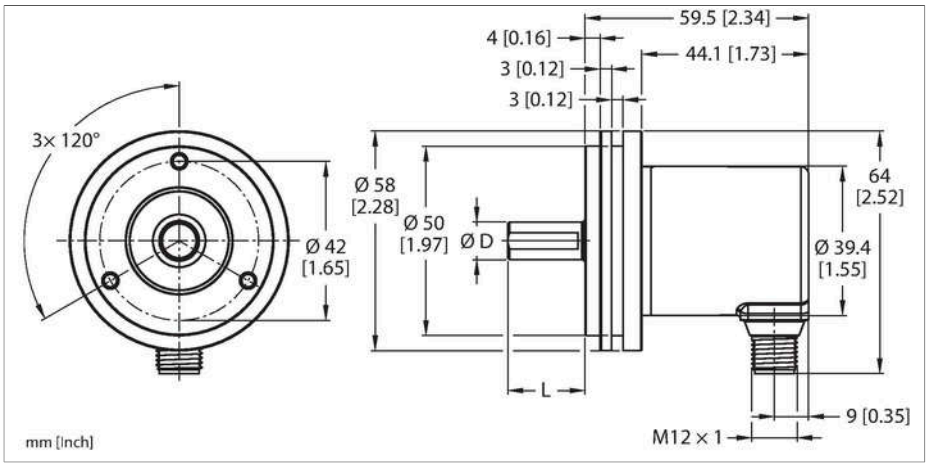

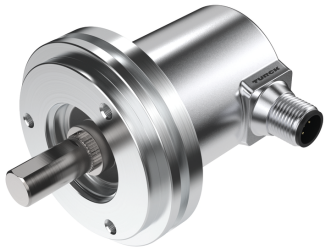

Technical data

Type	REM-E-195T10S-IOL32B-H1141
ID	100021184
Measuring principle	Magnetic
General data	
Max. Rotational Speed	4000 rpm
Repeatability (at 25 °C)	± 0.2 °
Absolute accuracy (at 25 °C)	± 1 °
Output type	Absolute multiturn
Electrical data	
Operating voltage	18…30 VDC
No-load current	30 mA
Short-circuit protection	yes
Wire breakage/Reverse polarity protection	yes
Communication protocol	IO-Link
IO-Link	
IO-Link specification	V 1.1
Programming	FDT/DTM
Mechanical data	
Design	Solid shaft
Flange type	Synchro flange
Flange diameter	Ø 58 mm
Shaft Type	Solid shaft
Shaft diameter D [mm]	10
Shaft Length L [mm]	20
Shaft material	Stainless steel

Features

- Synchro flange, Ø 58 mm
- Solid shaft, Ø 10 mm × 20 mm
- Magnetic measuring principle
- Shaft material: stainless steel
- Protection class IP64 on housing and shaft side
- -20…+70 °C
- Max. 4000 rpm (continuous operation 2000 rpm)
- Energy harvesting technology
- 18…30 VDC
- M12 × 1 male connector, 4-pin
- Singleturn resolution 14 bit scalable, default 14 bit
- Multiturn resolution scalable only to 18 bits over total resolution, default 18 bits
- Total resolution 32 bit scalable, default 32 bit

Wiring diagram

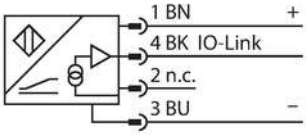

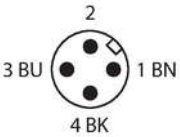

REM-E-195T10S-IOL32B-H1141| 19-07-2023 04-26 | Technical modifications reserved

Technical data

Housing material	Die-cast zinc
Electrical connection	Connector, M12 × 1
	5-pin
Axial shaft load	40 N
Radial shaft load	80 N
Environmental conditions	
Ambient temperature	-20…+70 °C
Vibration resistance (EN 60068-2-6)	30 g (300 m/s²), 10…2000 Hz
Shock resistance (EN 60068-2-27)	500 g (2500 m/s²), 4 ms
Protection class	IP64
Protection class shaft	IP64
MTTF	25 years

REM-E-195T10S-IOL32B-H1141| 19-07-2023 04-26 | Technical modifications reserved