**MULTIPLE TIMING MODES:** The 407 is available with selectable On-Delay, Off-Delay or Interval timing modes. These timing modes energize a set of DPDT output contacts. When in the On-Delay mode, the 407 begins timing when the timer is energized. In On-Delay mode, the contacts transfer at time out. When in the Off-Delay mode, the 407 begins timing when the Start input is de-energized. In Off-Delay mode, the contacts transfer at time out. When in the Interval mode, the contacts transfer when the timer is energized. In Interval mode, the contacts release at time out.

**UNIVERSAL POWER SUPPLY:** All 407 timers can be powered using 24-240 VAC or 24 VDC power, greatly simplifying ordering and inventory management of replacement units.

**HIGH ACCURACY:** The 407's timing circuit is not a simple RC circuit. It utilizes the sophistication of a proprietary integrated circuit that includes counting technology along with a stable oscillator to provide repeatable time delays.

**1/16 DIN HOUSING:** The 48mm$^2$ (1/16 DIN) housing is compact. The 407 is mounted in an 11-pin round socket. With an optional mounting clip, the 407 can be panel mounted.

The Dial on the 407 is extra-large and is easy to read. When fractional ranges are selected, decimal points are clearly indicated.

The Mode **SELECT AND RANGE** select switches are located on the side of the unit, so that when panel mounted, these switches are not accessible to the operator. This tamper proof feature prevents unauthorized or hazardous changes to the timing mode and range from being made.

**CYCLE PROGRESS INDICATION:** The 407 LED indicator provides a unique and effective method of cycle progress indication. Off before timing, the LED blinks at an ever increasing rate as the cycle progresses; once every 3-1/2 seconds during the first 10% of the cycle, twice during the second 10%, and so on. At time out, the LED pulses at a high rate. (In the 1, 5, 10 and 50 second ranges, the LED is Off before timing, steady On during timing, and pulsing On after time-out).

## OPERATIONS

Timing begins when the start switch is closed (ON-delay and INT modes) or opened (OFF-delay mode). This starts an oscillator which runs at a frequency determined by the time setting. A fixed number of counts from the oscillator determines the end of the timing cycle. The time required to accomplish this depends upon the oscillator frequency. During timing, An LED located on the dial face blinks. For the first 10% of the cycle, the LED repeatedly blinks once followed by a pause. For the second 10%, it blinks twice and so on indicating he cycle progress. The LED flashes rapidly and continuously after time out.

**ON-DELAY MODE:** At time out, the DPDT relay transfers its contacts. These contacts remain transferred until the start switch is opened or power is removed by some other means.

**INTERVAL MODE:** When the start switch is closed, the DPDT relay transfers its contacts. The contacts remain transferred until time out. The timer will not start again until the start switch is opened or power is removed by some other means. The 407B then resets and is ready for another cycle.

**OFF-DELAY MODE:** Power must be applied to the timer before and during timing (terminals #10 & 2). Upon closure of the start switch, the DPDT relay transfers its contacts. The timing begins when the start switch is opened. The relay remains energized during timing. At time out, the relay de-energizes.

c UL us
E48329

CE




## *1/16 DIN Multi-Mode Timer*

- Selectable ON-Delay/OFF-Delay/Interval Timing Modes
- Separate Start Input
- Output Contacts rated 10A at 120/240 VAC and 30 VDC
- Six Timing Ranges in a single unit
- 1 and 10 SEC, MIN, and HRS
  5 and 50 SEC, MIN, and HRS
- Universal Power Supply; 24-240 VAC and 24 VDC
- 48mm$^2$ DIN Standard housing
- Large and easy to read dial shows decimal points
- Round (octal) socket mount or mount in panel cutout
- Range and Mode select are tamper proof when panel mounted
- Unique flashing cycle progress indication

The 407C Directly Replaces 407B and 407A

Special note for Off-Delay operation: When operated from AC, the start switch must be of a dry contact type such as a relay contact or mechanical switch. When operated from DC, the start switch can be a dry contact type such as a relay contact or mechanical switch. In addition, a solid-state device may be used as long as its saturation voltage drop is less than 1.5 VDC at 50mA.

## SPECIFICATIONS

| | | |
|---|---|---|
| **MODELS** | 407C100F3X | ON-Delay, OFF-Delay, Interval Timing with (1) DPDT relay (1 or 10 SEC/MIN/HRS) |
| | 407C500F3X | ON-Delay, OFF-Delay, Interval Timing with (1) DPDT relay (5 or 50 SEC/MIN/HRS) |
| | Both models available in 6 ranges from 1 SEC to 10 HRS or 5 SEC to 50 HRS | |
| **CONTACT RATING** | Rated 10 AMPS resistive at 30 VDC or 250 VAC (or less) 1/8 HP @120 VAC 1/4 HP @ 240 VAC, 240 VA @ 240 VAC<br>LIFE: 10 million operation with no load<br>100,000 operations with:<br>10 AMPS at 30 VDC (or less) or<br>10 AMPS at 250 VAC (or less) | |
| **CONTACT MATERIAL** | Silver Nickel | |
| **TEMPERATURE RATING** | 0° to 122°F (-18°C to 50°C) | |
| **MOUNTING** | Plug-in 11-Pin round base | |
| | Options: | Surface mounting socket<br>DIN rail mounting socket<br>Panel-mounting adapter kit<br>Plug-on socket kit |
| **POWER REQUIREMENTS** | Universal power supply - reverse polarity protected<br>Unit will accept power from 24 to 240 VAC, 50 or 60 Hz, (+10%, -20%) 24 VDC (+20%, -20%) | |
| | AC | Inrush - 1.5 Amps<br>Power required - 1.2 watts |
| | DC | Maximum ripple @ 100 Hz - 5%<br>Current required - 50mA<br>Power required - 1.2 watts<br>F option - Peak inrush current = 2 AMPS @ 24 VDC<br>N option - Peak inrush current = 150 mA @ 24 VDC |
| **REPEAT ACCURACY** | Varies as a function of temperature.<br>Any voltage (constant temperature): –0.5%*<br>Any voltage (0 F to 140 F): –2.0%*<br>*Variation from average actual time. | |

## SPECIFICATIONS (CONTINUED)

| | | |
|---|---|---|
| **MINIMUM SETTING** | 2% of range, with the exception of 50 mSEC on the 1 second range | |
| **SETTING ACCURACY** | ±5% of range | |
| **RESET** | a | 0 to 20 mSEC power interruption: guaranteed no reset. |
| | b | 20 to 65 mSEC; it may reset (40 mSEC typical reset). |
| | c | Over 65 mSEC guaranteed to reset. |
| | The TDR will reset properly and not start timing when subjected to an open start switch leakage of 1.5 mA or less. (Prox switch & Triac drive applications) | |
| **TERMINAL #6 (START SWITCH REQUIREMENTS OFF-DELAY)** | DC | Minimum Current Rating - 50mA<br>Maximum saturated voltage drop - 1.5 VDC |
| | AC | Minimum Current Rating - 1.5 A |
| **WEIGHT** | 5 oz. (140 g) | |

## MODEL NUMBER

| **MODEL NUMBER** | 407C | | | 3 | |
|---|---|---|---|---|---|
| **RANGE** | | | | | |
| Six dial-selected ranges (1 or 10 SEC/MIN/HRS) | | 100 | | | |
| Six dial-selected ranges (5 or 50 SEC/MIN/HRS) | | 500 | | | |
| **VOLTAGE & FREQUENCY** | | | | | |
| 12 VDC | | | E | | |
| 24 to 240 VAC (50/60 Hz) and 24 VDC | | | F | | |
| 24 VDC (low inrush current for short-circuit protected sensors) | | | N | | |
| **ARRANGEMENT** | | | | | |
| 11-pin ON -Delay, OFF-Delay, Interval Timing Modes | | | | 3 | |
| **FEATURES** | | | | | |
| Standard | | | | | X |
| Special | | | | | K |

**ACCESSORIES**

| | |
|---|---|
| 11-Pin surface/DIN rail socket | 000-825-86-00 |
| Hold down for above socket (Requires 2 per unit) | 405-025-07-00 |
| Panel mounting bracket | 405-320-02-00 |
| Plug-in socket kit (11-pin) | 314-260-07-00 |

## WIRING

**MODEL 407C...F3X**

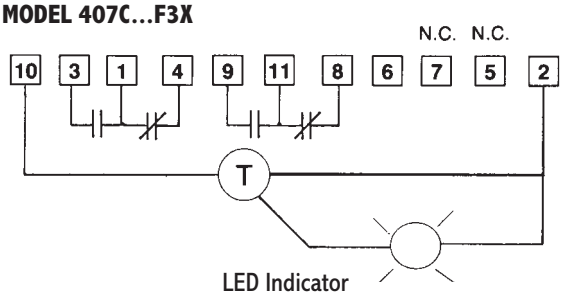


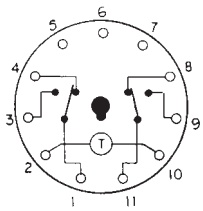


TERMINAL WIRING
CAUTION: Do NOT connect terminal 6 to L1 (AC Hot or DC+). Damage to unit will result.
Terminal 6 is a dry contact only!

## DIMENSIONS (INCHES/MILLIMETERS)

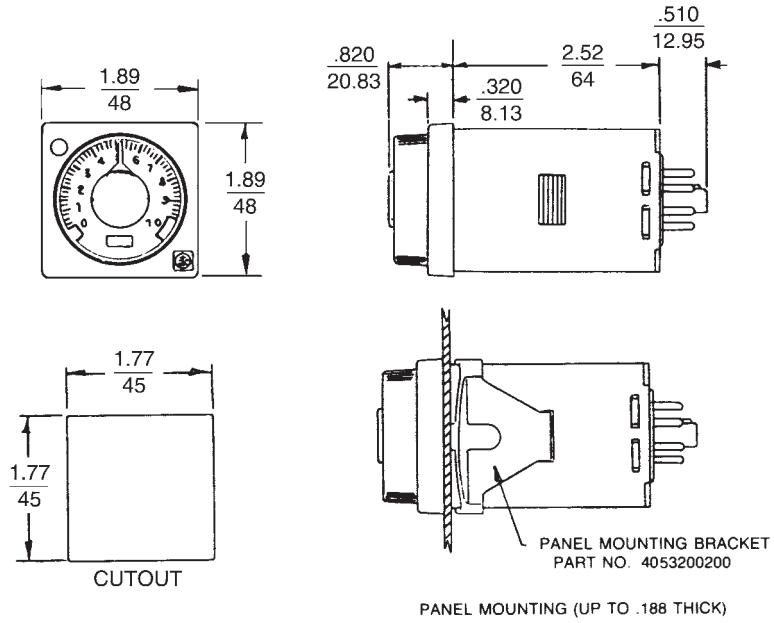


Optional 11-pin Socket
Part Number 000-825-86-00

## TYPICAL CIRCUITS

### ON-DELAY (MODE SWITCH IN ON-DELAY POSITION)

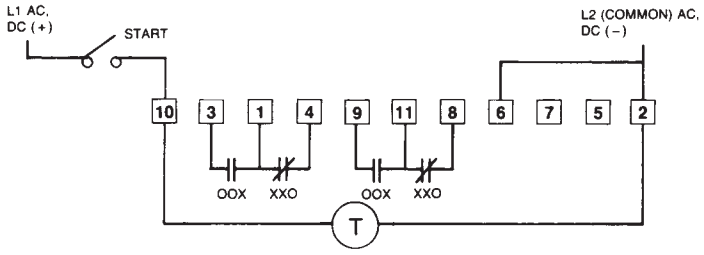


### OFF-DELAY (MODE SWITCH IN OFF-DELAY POSITION)

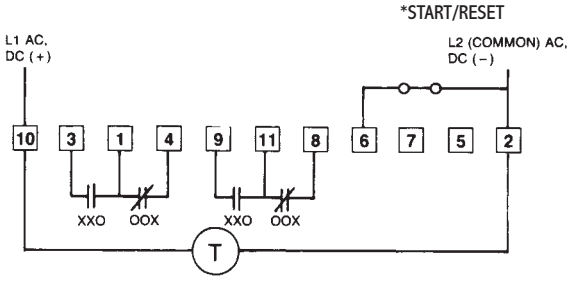


### INTERVAL (MODE SWITCH IN INTERVAL POSITION)

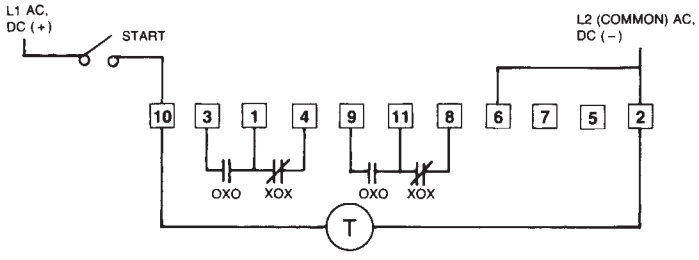


*in off-delay mode, start switch must be isolated.
Do NOT connect any load in parallel

