F-Series Single Pole Toggle Switches



General purpose workhorses with options tailored to meet most any need. Ratings to 20A 277VAC, various actuator, bushing, termination, and circuit choices allow this versatile switch to easily integrate into a variety of different applications. The F-Series has a storied history in the Marine, Food Service, Generator, Industrial Control, and Office Automation markets and is appropriate for usage in low voltage DC applications as well.

Dielectric Strength
UL/CSA:
1000V - live to dead metal parts
Electrical Life
50,000 cycles- maintained
25,000 cycles- momentary
Mechanical Life
100,000 cycles
Operating Temperature
0°F to 150°F (-17.8°C to +65.6°C)

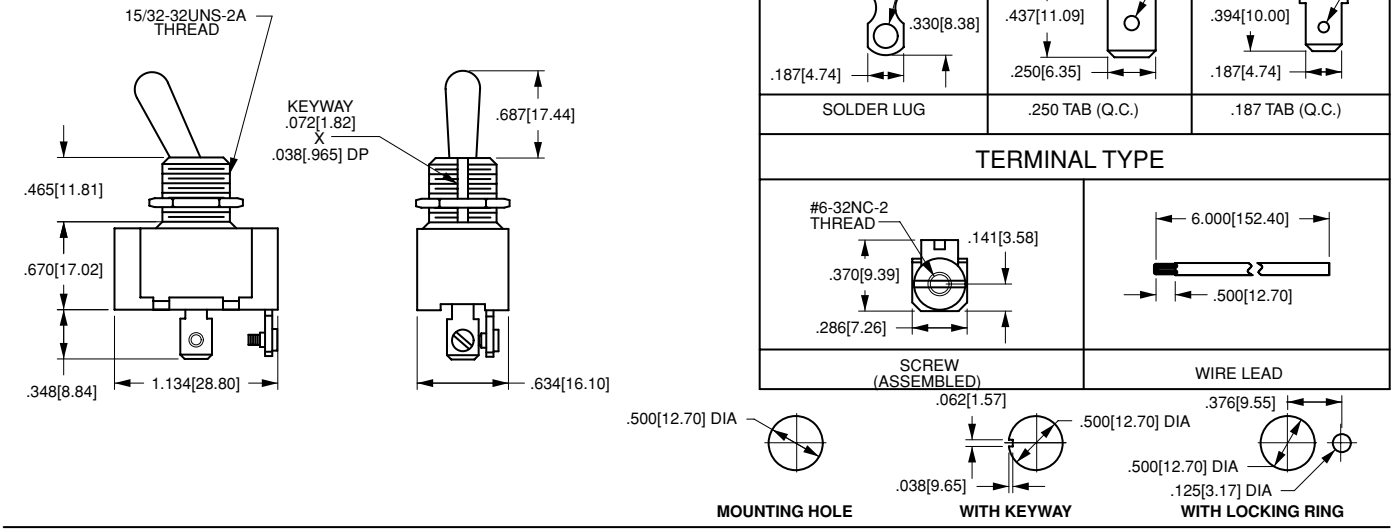

2FA54 - **73** **/ TABS**

1 *Base Part Number* — 2 *Actuator Style* — 3 *Tab Terminals*

1 BASE PART NUMBER: SERIES/CIRCUITRY/RATING/TERMINATION[1]

10A 250VAC; 15A 125VAC; 3/4 HP 125-250VAC

	Solder Lugs	.250 Tabs	Screw Terminals
ON-NONE-OFF	**2FA53**	**2FA53- . . . /TABS**	**2FA54**
(ON)-NONE-OFF	**6FA53**	**6FA53- . . . /TABS**	**6FA54**
ON-NONE-(OFF)	**6FA57**	**6FA57- . . . /TABS**	**6FA58**
ON-NONE-ON	**2FB53**	**2FB53- . . . /TABS**	**2FB54**
ON-NONE-(ON)	**6FB53**	**6FB53- . . . /TABS**	**6FB54**
ON-OFF-ON	**2FC53**	**2FC53- . . . /TABS**	**2FC54**
ON-OFF-(ON)	**6FC57**	**6FC57- . . . /TABS**	**6FC58**
(ON-OFF-(ON)	**6FC53**	**6FC53- . . . /TABS**	**6FC54**

Additional ratings up to 20A 125VAC, 12A 250VAC, 1HP 120-240 VAC available. Consult factory for specifics.

2 ACTUATOR STYLE
BAT STYLE TOGGLE[2]

unsealed	*sealed*	*toggle length*	*bushing length*
73	**78**	0.687	0.465
E3	**E8**	2.000	0.465

3 TAB TERMINALS

/TABS	Tab Terminals
(blank)	Leave blank if tab terminals not required.

NOTES
1 Consult factory for .187 tab, wire lead and combination screw/tab/solder lug termination callouts.
2 Additional toggle options are available. Consult factory.
( ) indicates momentary function.