# OGH301

## Diffuse reflection sensor with background suppression

OGH-DPKG/US100

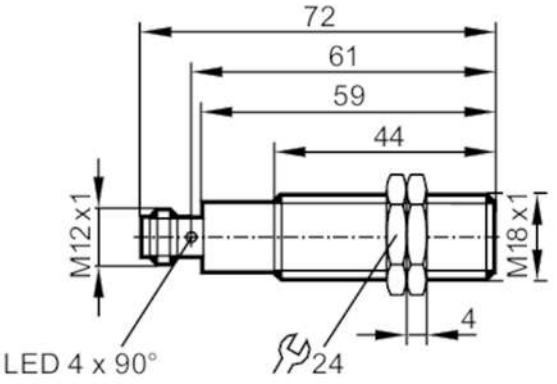


transmitter in lower lens
receiver in upper lens

| | | |
|---|---|---|
| **Product characteristics** | | |
| Type of light | | red light |
| Housing | | threaded type |
| **Application** | | |
| Special feature | | Background suppression |
| Function principle | | Diffuse reflection sensor |
| **Electrical data** | | |
| Operating voltage | [V] | 10...36 DC |
| Current consumption | [mA] | 25 |
| Protection class | | II |
| Reverse polarity protection | | yes |
| Type of light | | red light |
| Wave length | [nm] | 624 |
| **Outputs** | | |
| Electrical design | | PNP |
| Output function | | dark-on mode |
| Max. voltage drop switching output DC | [V] | 2.5 |
| Permanent current rating of switching output DC | [mA] | 150; (200 (...60 °C)) |
| Switching frequency DC | [Hz] | 1000 |
| Short-circuit protection | | yes |
| Type of short-circuit protection | | pulsed |
| Overload protection | | yes |
| **Detection zone** | | |
| Range | [mm] | < 100; (white paper 200 x 200 mm 90% remission) |
| Range on white object (90 % remission) | [mm] | < 100 |

# OGH301

## Diffuse reflection sensor with background suppression

OGH-DPKG/US100

| | | | |
|---|---|---|---|
| Range on grey object (18 % remission) | [mm] | < 100 | |
| Range on black object (6 % remission) | [mm] | < 100 | |
| Range adjustable | | no | |
| Max. light spot diameter | [mm] | 9 | |
| Light spot dimensions refer to | | Range | |
| Background suppression available | | yes | |
| **Operating conditions** | | | |
| Ambient temperature | [°C] | -25...80 | |
| Protection | | IP 65; IP 67; IP 68; IP 69K | |
| **Tests / approvals** | | | |
| EMC | | EN 60947-5-2 | |
| MTTF | [years] | 372 | |
| **Mechanical data** | | | |
| Weight | [g] | 59.2 | |
| Housing | | threaded type | |
| Dimensions | [mm] | M18 x 1 / L = 72 | |
| Thread designation | | M18 x 1 | |
| Materials | | housing: stainless steel (316L/1.4404); Sealing: EPDM | |
| Lens material | | PMMA | |
| **Displays / operating elements** | | | |
| Display | | switching status | 1 x LED, yellow |
| **Accessories** | | | |
| Items supplied | | lock nuts: 2 | |
| **Remarks** | | | |
| Remarks | | operating voltage "supply class 2" according to cULus | |
| Pack quantity | | 1 pcs. | |
| **Electrical connection** | | | |

Connector: 1 x M12; coding: A

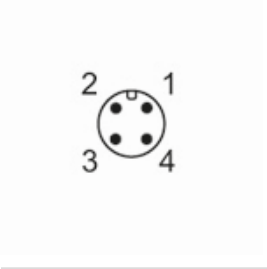

# OGH301

## Diffuse reflection sensor with background suppression

**OGH-DPKG/US100**

## Connection

