E12561

Y connection cable

YDOGS060PLS0001H03DOGH030MSS

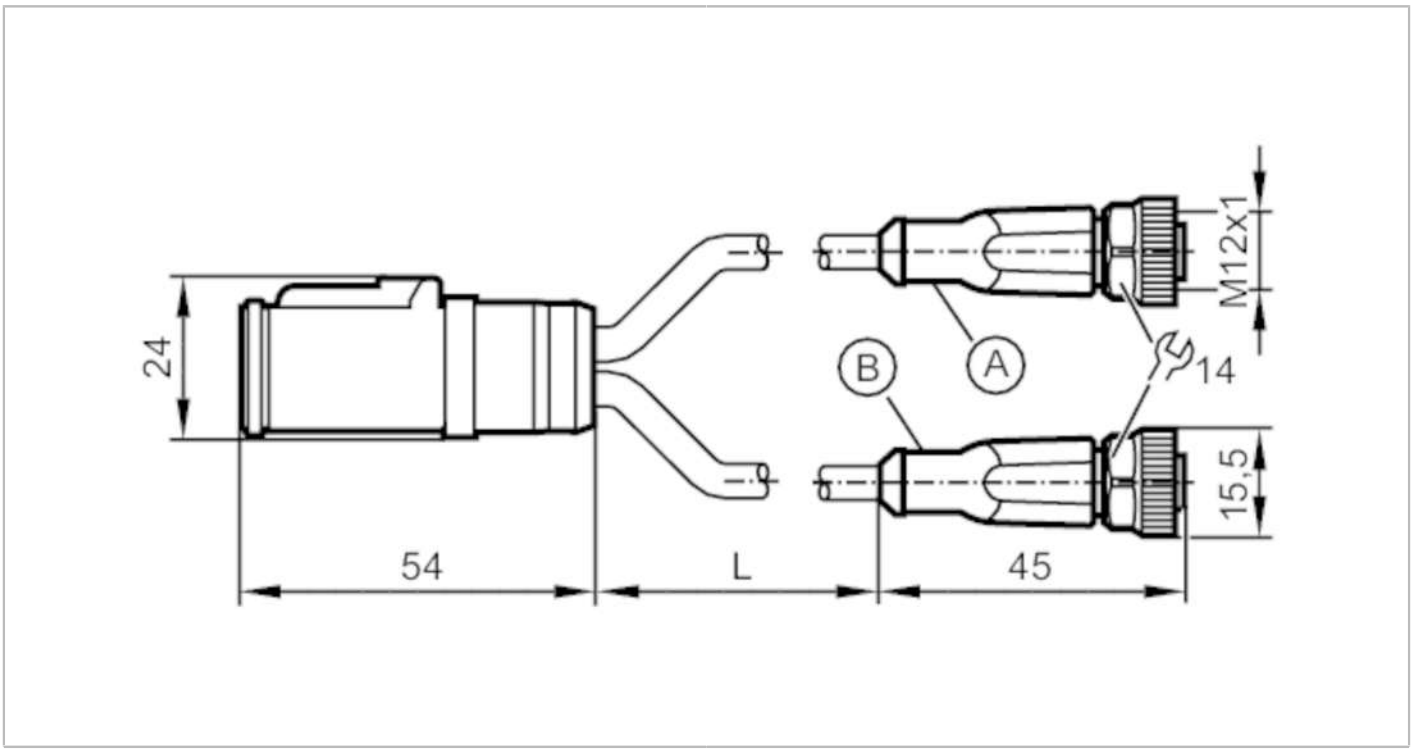

Application			
Special feature			Free from silicone; Halogen-free; Drag chain suitability
Free from silicone			yes
Electrical data			
Operating voltage	[V]		8...32 DC
Protection class			III
Max. current load total	[A]		4
Operating conditions			
Ambient temperature	[°C]		-40...80
Ambient temperature (moving)	[°C]		-20...80
Protection			IP 67; (mating connector plugged in)
Mechanical data			
Weight	[g]		135
Materials			PA; socket: TPU orange; Sealing: FKM
Material nut			brass, nickel-plated
Number of ports splitter box			2
Drag chain suitability			yes
Drag chain suitability		bending radius for flexible use	min. 10 x cable diameter
		travel speed	max. 3.3 m/s for a horizontal travel length of 5 m and max. acceleration of 5 m/s²
		bending cycles	> 5 Mio.
		torsional strain	± 180 °/m

E12561

Y connection cable

YDOGS060PLS0001H03DOGH030MSS

Remarks

Pack quantity	1 pcs.

Electrical connection - DEUTSCH connector

Cable: 1 m, PUR, Halogen-free, black, Ø 5.4 mm; 6 x 0.5 mm² (28 x Ø 0.15 mm)

Connector: 1 x DEUTSCH connector, straight



Connection

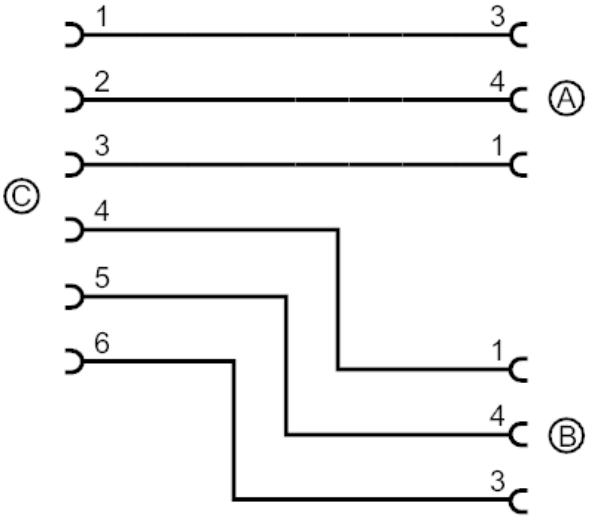

Electrical connection - socket

Cable: 1 m, PUR, Halogen-free, black, Ø 5.4 mm; 3 x 0.5 mm² (28 x Ø 0.15 mm)

Connector: 2 x M12, straight; coding: A; Locking: brass, nickel-plated; Tightening torque: 0.6...1.5 Nm

