Electronic Audible Signal Devices / Electronic Buzzers Installation 109

Electr. Buzzer EM Contin. tone 230VAC BK



Part No.: 109.000.68

MECHANICAL DATA	
Height	59 mm
Diameter	52 mm
Materials	PC PC/ABS
Housing colour	Black
Protection category	IP65
Connection	Screw terminals
cross-sectional area maximum	1,50mm² / 16AWG
Type of fixing	Built-in mounting
Working temperature minimum	-20°C
Working temperature maximum	+50°C
Weight with packaging	64 g
Product weight	64 g

ELECTRICAL DATA	
Operating voltage	230V
Operating voltage type	AC
Operating voltage frequency	50Hz
Operating voltage tolerance	+/- 10%
Rated operational voltage	230 VAC
Rated operational current	25 mA
Rated inrush current	<500mA
Protection class	Protection class 2
Pollution degree	3 In the connection area: 2
Overvoltage category	II
Isolation voltage	Ui = 250V; Uimp = 2.500V

ACUSTICAL DATA	
Volume (max) at 1m distance	80,0 dB (A)
Acoustic signal image	Continuous tone
Audio frequency	2100 Hz
Acoustic service life	5,000 h minimum

APPROVAL DATA	
Conforms with CE	Yes
WEEE	Yes
Conform with ATEX-directive	No
Conforms with CCC	No
Conforms with UL	cULus

! For additional installation and mounting information, refer to the appropriate user guide at www.werma.com. This printed copy is for information only and is subject to alteration.

Electronic Audible Signal Devices / Electronic Buzzers Installation 109

Electr. Buzzer EM Contin. tone 230VAC BK

UL Type Rating	Type 4X
Conforms with FCC	No
Conforms with IC	No
EAC certificate available	Yes
Conforms with UKCA (Importer)	Yes (WERMA (UK) Ltd.)
Conforms with AS-I	No
ICAO Certification	No
Conforms with GL	No
Conforms with RoHS CN	No
Conforms with VdS	No

DRAWING

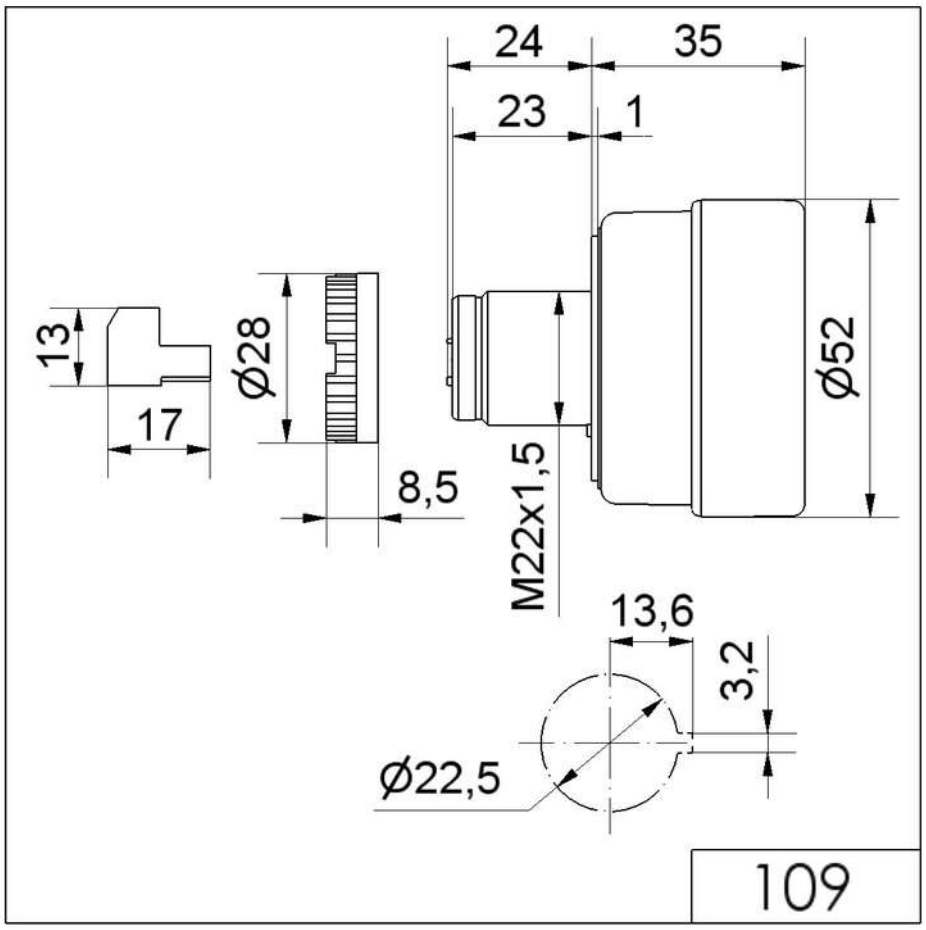

! For additional installation and mounting information, refer to the appropriate user guide at www.werma.com. This printed copy is for information only and is subject to alteration.