RM9007

Absolute multiturn encoder with solid shaft

RMS0024-C24/US6

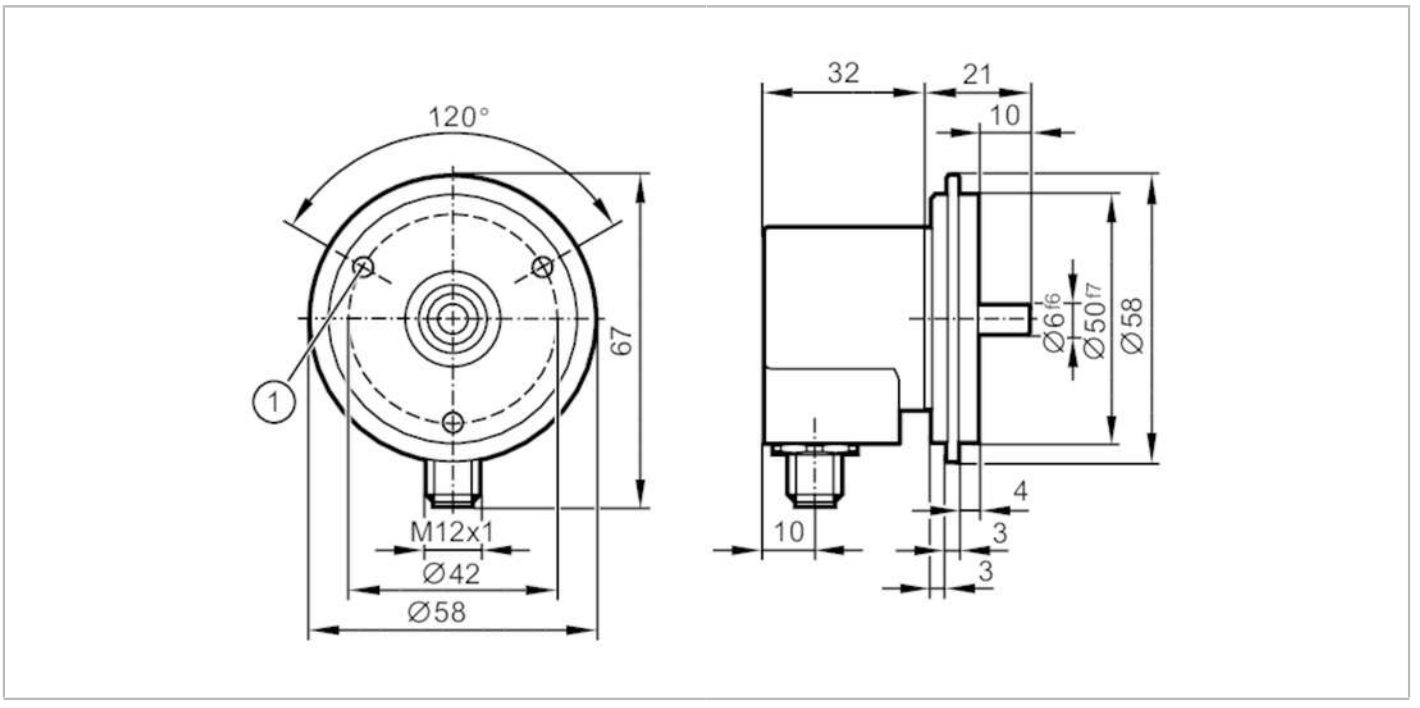

Product characteristics		
Resolution		4096 steps; 4096 revolutions; 24 bit
Communication interface		CAN
Shaft design		solid shaft
Shaft diameter	[mm]	6
Application		
Function principle		absolute
Revolution type		multiturn
Electrical data		
Operating voltage	[V]	9...30 DC
Current consumption	[mA]	< 100; ((10 V DC) ; ≤ 50 (24 V DC))
Protection class		III
Reverse polarity protection		yes
Outputs		
Output function		CANopen interface
Short-circuit protection		yes
Code		binary
Measuring/setting range		
Resolution		4096 steps; 4096 revolutions; 24 bit
Accuracy / deviations		
Accuracy	[°]	0.08
Software / programming		
Parameter setting options		CAN parameter; scaling; preset; Baud rate; direction of rotation; Node ID

RM9007

Absolute multiturn encoder with solid shaft

RMS0024-C24/US6

Interfaces			
Communication interface		CAN	
Number of CAN interfaces		1	
CAN			
Protocol		CANopen	
Factory settings		Baud rate: 125 kBit/s node ID: 32	
Version		DSP - 406 V3.1; DS 301 V4.02; DS 306 V2.0	
Terminating resistor		yes	
Operating conditions			
Ambient temperature	[°C]	-40...85	
Protection		IP 65	
Tests / approvals			
Shock resistance		EN 60068-2-27	100 g / 6 ms
Vibration resistance		EN 60068-2-6	10 g / 10...1000 Hz
MTTF	[years]	240	
Mechanical data			
Weight	[g]	282.75	
Dimensions	[mm]	Ø 58 / L = 39	
Materials		flange: aluminium; housing cap: steel	
Max. revolution, mechanical	[U/min]	12000	
Max. starting torque	[Nm]	3	
Reference temperature torque	[°C]	20	
Shaft design		solid shaft	
Shaft diameter	[mm]	6	
Shaft material		stainless steel (303/1.4305)	
Max. shaft load axial (at the shaft end)	[N]	40	
Max. shaft load radial (at the shaft end)	[N]	110	
Fixing flange		synchro-flange	

Electrical connection

Connector: 1 x M12, axial; coding: A

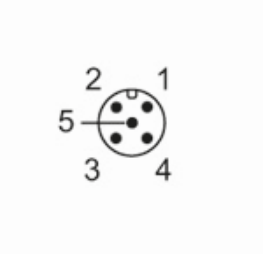

1	CAN_GND
2	VBBc
3	GND (PE)
4	CAN_High
5	CAN_Low