E12517

Target puck for valve actuators

PUCK 53MM BASIC

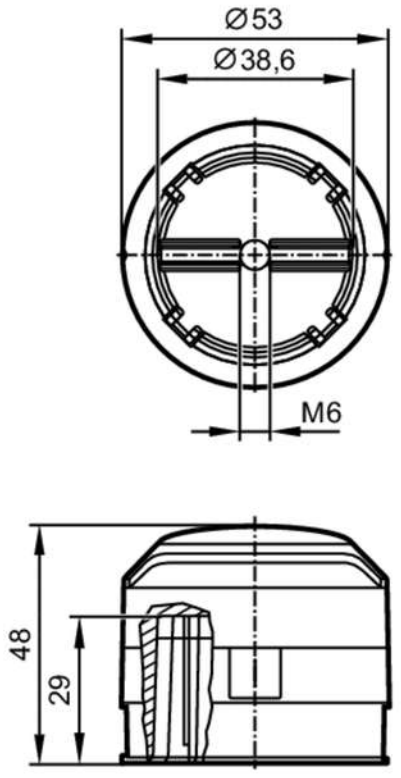

Application		
Design		for mechanical interfaces to pneumatic actuators or manually-operated valves VDI / VDE 3845, ISO 5211 / DIN 3337
Mechanical data		
Weight	[g]	60.5
Target puck diameter	[mm]	53
Hole spacing	[mm]	80
Shaft height of valve drive	[mm]	30
Materials		target puck: PA 6 black; metal parts: stainless steel
Tightening torque	[Nm]	2.5...3
Accessories		
Items supplied		half-round head screw: 1 x M6 x 16, stainless steel
Remarks		
Pack quantity		1 pcs.