DATASHEET



AZ 16-03ZVRK-ST

- Connector M12, 8-pole
- Thermoplastic enclosure
- Double-insulated
- 52 mm x 90 mm x 30 mm
- Universal coding
- Long life
- High level of contact reliability with low voltages and currents
- Insensitive to soiling
- Slotted holes for adjustment, circular holes for location

Data

Ordering data

Product type description	AZ 16-03ZVRK-ST
Article number (order number)	103011894
EAN (European Article Number)	4030661480374
eCl@ss number, version 12.0	27-27-26-02
eCl@ss number, version 11.0	27-27-26-02
eCl@ss number, version 9.0	27-27-26-02
ETIM number, version 7.0	EC002592
ETIM number, version 6.0	EC002592

Approvals - Standards

Certificates	cULus CCC

General data

Standards	EN ISO 13849-1 EN ISO 14119 EN IEC 60947-5-1
Coding level according to EN ISO 14119	Low
Working principle	electromechanical
Housing material	Plastic, glass-fibre reinforced thermoplastic, self-extinguishing
Gross weight	139 g

General data - Features

Number of actuating directions	3
Number of safety contacts	3
Number of cable glands	3

Safety classification

Standards	EN ISO 13849-1
Performance Level, up to	c
Category	1
B_{10D} Normally-closed contact (NC)	2,000,000 Operations
Note	Electrical life on request.
B_{10D} Normally-open contact (NO)	1,000,000 Operations
Note	at 10% I_e and ohmic load
Mission time	20 Year(s)

Safety classification - Fault exclusion

Please note:	Can be used when fault exclusion for dangerous damage to the 1-channel mechanism is permissible and sufficient protection against manipulation is guaranteed.
Performance Level, up to	d
Category	3
Note	for 2-channel use and with suitable logic unit.

Mission time	20 Year(s)

Mechanical data

Mechanical life, minimum	1,000,000 Operations
Latching force	30 N
Positive break travel	8 mm
Positive break force per NC contact, minimum	10 N
Positive break force, minimum	30 N
Actuating speed, maximum	2 m/s
Mounting	Screws
Type of the fixing screws	2x M6

Mechanical data - Connection technique

Connector position	Bottom
Cable entry	M12 (A-coding)
Termination	Connector plug M12, 8-pole, (A-coding)

Mechanical data - Dimensions

Length of sensor	30 mm
Width of sensor	52 mm
Height of sensor	90 mm

Ambient conditions

Degree of protection	IP67
Ambient temperature	-30 ... +80 °C
Storage and transport temperature	-40 ... +85 °C
Permissible installation altitude above sea level, maximum	2,000 m

Ambient conditions - Insulation values

Rated insulation voltage U_i	500 V
Rated impulse withstand voltage U_{imp}	6 kV
Overvoltage category	III
Degree of pollution	3
Rated impulse withstand voltage, connector 8-pole	0.8 kV

Electrical data

Thermal test current	10 A
Required rated short-circuit current	1,000 A
Switching element	3 NC contact
Switching principle	slow action, positive break NC contact
Maximum switching frequency	4,000 /h
Material of the contacts, electrical	Silver

Electrical data - Safety contacts

Voltage, Utilisation category AC-15	230 VAC
Current, Utilisation category AC-15	4 A
Voltage, Utilisation category DC-13	24 VDC
Current, Utilisation category DC-13	2 A
Note, Utilisation category DC-13	Connector 8-pole

Electrical data - Auxiliary contacts

Voltage, Utilisation category AC-15	230 VAC

Voltage, Utilisation category DC-13	24 VDC
Current, Utilisation category DC-13	2 A
Note, Utilisation category DC-13	Connector 8-pin

Scope of delivery

Scope of delivery	Slot covers for dust-proof covering of the openings not in use

Ordering code

Product type description:
AZ 16-(1)ZV(2)K-(3)-(4)-(5)

(1)

without	1 NO contact/1 NC contact
02	2 NC contact
03	3 NC contact
12	1 NO contact/2 NC contacts

(2)

without	Ejection force
R	Latching force 30 N

(3)

G24	with LED (only available for version with one NO and one NC contact)

(4)

M16	cable entry M16
M20	Cable entry M20
ST	Connector M12, 4 pole, bottom
STL	Connector M12, 4 pole, left
STR	Connector M12, 4 pole, right

(5)

2254	Latching force 5 N
1762	Front mounting
1637	Gold-plated contacts

Pictures

Product picture (catalogue individual photo)



ID: kaz16f02
| 177.3 kB | .jpg | 137.936 x 230.717 mm - 391 x 654 px - 72 dpi
| 96.4 kB | .png | 74.083 x 123.825 mm - 210 x 351 px - 72 dpi
| 48.8 kB | .jpg | 73.731 x 123.472 mm - 209 x 350 px - 72 dpi

Dimensional drawing basic component

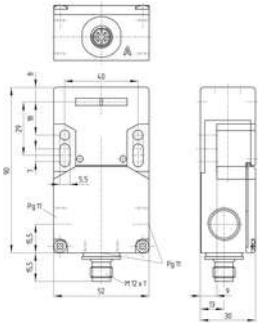

ID: kaz16g02
| 37.1 kB | .cdr |
| 6.5 kB | .png | 74.083 x 93.133 mm - 210 x 264 px - 72 dpi
| 200.1 kB | .jpg | 352.778 x 443.794 mm - 1000 x 1258 px - 72 dpi

Diagram

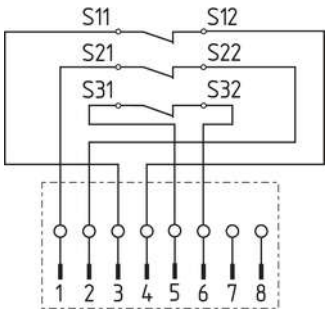

ID: kbns1k07
| 123.0 kB | .jpg | 352.778 x 342.9 mm - 1000 x 972 px - 72 dpi
| 4.0 kB | .png | 74.083 x 71.967 mm - 210 x 204 px - 72 dpi

Diagram

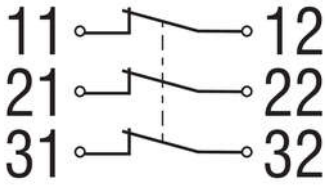

ID: k3o--k04
| 81.6 kB | .jpg | 352.778 x 210.961 mm - 1000 x 598 px - 72 dpi
| 3.6 kB | .jpg | 35.278 x 35.278 mm - 100 x 100 px - 72 dpi
| 3.4 kB | .png | 74.083 x 44.45 mm - 210 x 126 px - 72 dpi

Contact arrangement

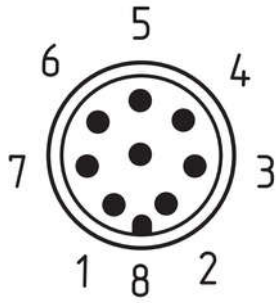

ID: km12-k8b
| 5.3 kB | .png | 73.731 x 87.489 mm - 209 x 248 px - 72 dpi
| 138.6 kB | .jpg | 352.425 x 417.689 mm - 999 x 1184 px - 72 dpi

Schmersal India Pvt. Ltd., Plot No - G-7/1, Ranjangaon MIDC, Tal. - Shirur, Dist.- Pune 412 220
The details and data referred to have been carefully checked. Images may diverge from original. Further technical data can be found in the manual. Technical amendments and errors possible.
Generated on: 26/12/2024, 11:05 am