MURR ELEKTRONIK
stay connected

MODLINK MSDD FRAME SINGLE TRANSPARENT

Closure 3 mm double bit incl. pluggable knob

Frame: plastic PA black
Lid: plastic, PC transparent
Closure: 3 mm double bit
with attachable rotation knob

Link to Product

Illustration



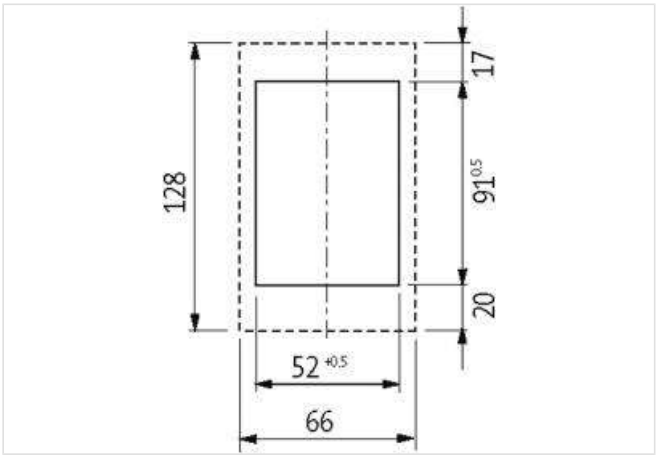

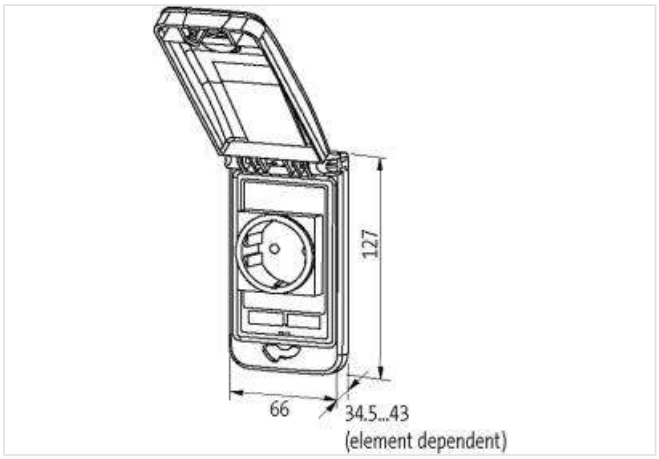

Product may differ from Image

Commercial data

ECLASS-6.0	27189217
ECLASS-6.1	27189260
ECLASS-7.0	27189260
ECLASS-8.0	27189260
ECLASS-9.0	27189260
ECLASS-10.1	27182810

The information in this Product-PDF has been compiled with the utmost care.
Liability for the correctness completeness and topicality of the information is restricted to gross negligence. Version: 2024-01-31

ECLASS-11.1	27182810
ECLASS-12.0	27182810
ETIM-5.0	EC002625
customs tariff number	85389099
GTIN	4048879368827
Packaging unit	1

Mechanical data | Mounting data

Height	127 mm
Width	66 mm
Depth	43 mm

Frame

Degree of protection (EN IEC 60529)	IP65
Operating temperature min.	-30 °C
Operating temperature max.	70 °C
Storage temperature min.	-30 °C
Storage temperature max.	80 °C
Suitable for installation wall thickness min.	1 mm
Suitable for installation wall thickness max.	5 mm
Color cover	transparent
Color housing	black
Material lid	PC
Material housing	PA

The information in this Product-PDF has been compiled with the utmost care.
Liability for the correctness completeness and topicality of the information is restricted to gross negligence. Version: 2024-01-31