DI5034

Compact evaluation unit for speed monitoring

DMC3024-WRKG/IO/US

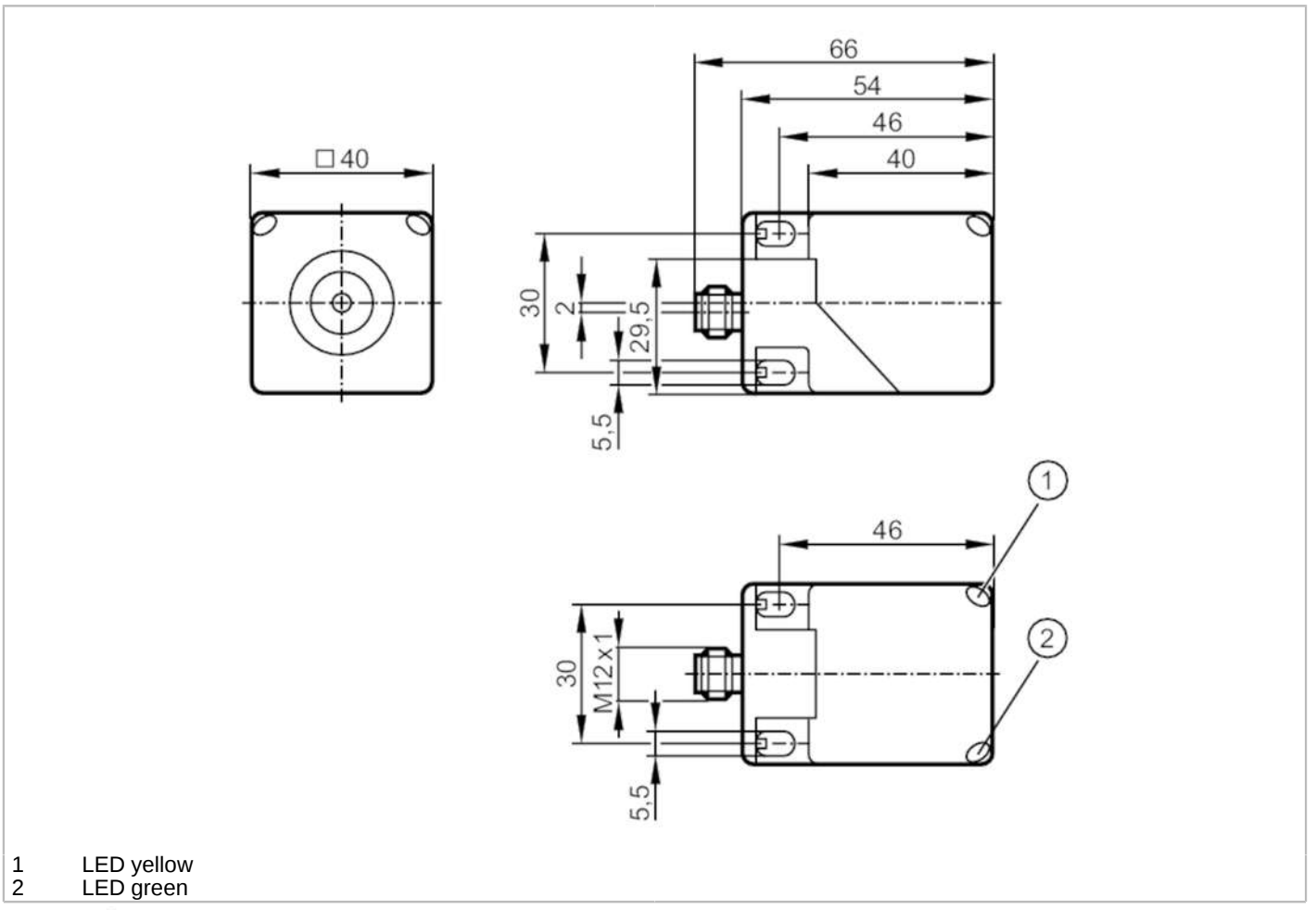

1 LED yellow
2 LED green

Product characteristics		
Electrical design		PNP/NPN
Output function		normally open / normally closed; (parameterisable)
Sensing range	[mm]	24
Communication interface		IO-Link
Housing		rectangular
Dimensions	[mm]	40 x 40 x 54
Application		
Application		simple evaluation of rotating and linear movement with regard to underspeed; blocking
Electrical data		
Nominal voltage DC	[V]	10...30
Current consumption	[mA]	< 10
Protection class		III
Reverse polarity protection		yes
Outputs		
Electrical design		PNP/NPN
Output function		normally open / normally closed; (parameterisable)

DI5034

Compact evaluation unit for speed monitoring

DMC3024-WRKG/IO/US

Max. voltage drop switching output DC	[V]	2.5	
Permanent current rating of switching output DC	[mA]	100	
Short-circuit proof		yes	
Overload protection		yes	
Detection zone			
Sensing range	[mm]	24	
Sensing range adjustable		no	
Operating distance	[mm]	0...19.44	
Measuring/setting range			
Setting range	[Imp/min]	5...9600	
Measuring principle		inductive	
Accuracy / deviations			
Correction factor		steel: 1 / stainless steel: 0.7 / brass: 0.5 / aluminium: 0.4 / copper: 0.3	
Hysteresis	[% of Sr]	10	
Response times			
Start-up delay	[s]	0...30; (In steps of: 100 ms; Default: 15 s)	
Max. damping frequency	[Imp/min]	12000	
Interfaces			
Communication interface		IO-Link	
Operating conditions			
Ambient temperature	[°C]	-40...85	
Storage temperature	[°C]	-25...85	
Protection		IP 67	
Tests / approvals			
EMC		EN 61000-4-2 ESD	4 kV CD / 8 kV AD
		EN 61000-4-3 HF radiated	10 V/m
		EN 61000-4-4 Burst	2 kV
		EN 61000-4-6 HF conducted	10 V
		EN 55011	class B
		EN 60947-5-2	
MTTF	[years]	636	
UL approval		UL Approval no.	A009
Mechanical data			
Weight	[g]	182	
Housing		rectangular	
Mounting		non-flush mountable	
Dimensions	[mm]	40 x 40 x 54	
Materials		PA	

DI5034

Compact evaluation unit for speed monitoring

DMC3024-WRKG/IO/US

Displays / operating elements		
Display	operation	LED, green
	SIO mode	
	output stage supplied with current	4 x LED, yellow
	IO-Link mode	
	target in measuring range	4 x LED, yellow
	target outside measuring range	4 x LED, yellow flashing

Electrical connection

Connector: 1 x M12; coding: A; Moulded body: brass, white bronze coated



Connection

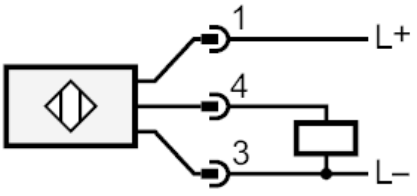

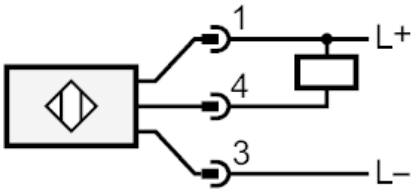

4: OUT / IO-Link