BOS 26K-PA-1HC-S 4-C
Photoelectric Sensors,
Diffuse

PNP
NO/NC

BALLUFF
sensors worldwide

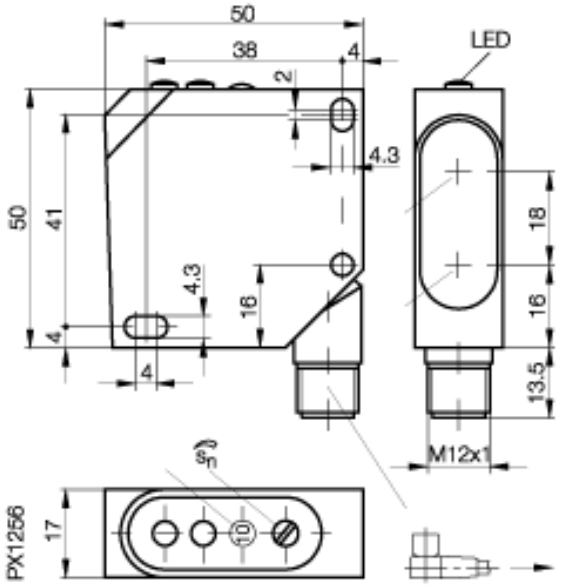

Electrical data:

Connection	Connector S4 (M12)
Rated insulation voltage (Ui)	250 AC
Load capacitance max	0.33 µF
Switching output	PNP
Switching element function	NO/NC
Operating frequency (f)	1000 Hz
Rated operational voltage	24 DC V
Current Consumption Io max. (No Load)	35 mA
Off Time delay	0,5 ms
On Time delay	0,5 ms
Supply voltage min.	10 V
Supply voltage max.	30 V
Voltage ripple max.	max. 10% from UB
Voltage drop Ud max. at Ie	2,4 V
Switching frequ. standard beam	1000 Hz

Mechanical data:

Ambient temperature max.	+60 °C
Ambient temperature min.	-20 °C
Sensing face material	PMMA
Housing material	ABS UL 94 V-O
Sensing Distance max.	300 mm
sensitivity adjustment	2-turn Potentiometer
weight	100 g
Sensing Distance min.	30 mm

General data:

Supply voltage indication	yes, green LED
Function indication	yes, yellow LED
Short circuit protected	yes
Degree of protection IP	IP 67
Protected against polarity reversal	yes
sensitivity adjustment	2-turn Potentiometer
Voltage drop at 100mA max.	2,4 V
Type	Diffuse, Background suppression

Optical data:

Emitter Light Source	red light
permissable ambient light	5000 Lux

Wiring

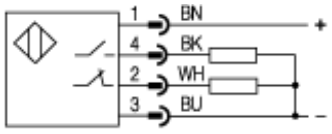

Pinout

