# RO3103

## Incremental encoder with hollow shaft

INCREMENTAL ENCODER BASIC LINE

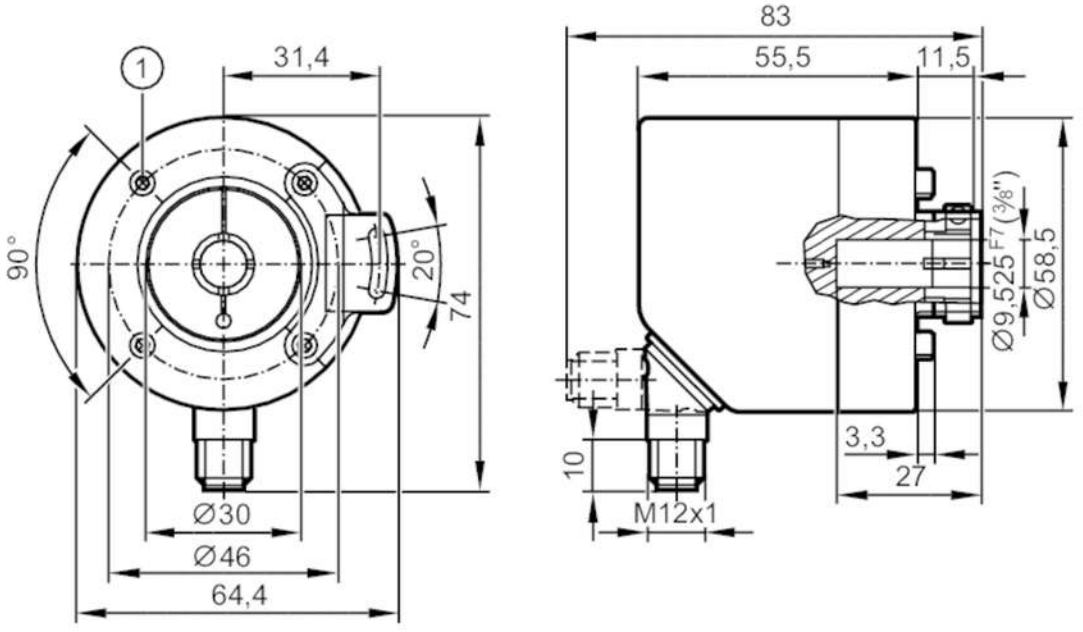


1 M3 x 0.5 Depth 6 mm

| | | |
|---|---|---|
| **Product characteristics** | | |
| Resolution | | 1...10000; (parameterisable; Factory setting: 1024) resolution |
| Communication interface | | IO-Link |
| Shaft design | | hollow shaft open to one side |
| Shaft diameter | [mm] | 9.525 |
| **Application** | | |
| Function principle | | incremental |
| Detection system | | magnetic |
| **Electrical data** | | |
| Operating voltage | [V] | 4.75...30 DC |
| Current consumption | [mA] | < 150 |
| Protection class | | III |
| Reverse polarity protection | | yes |
| Power-on delay time | [s] | 0.5 |
| Max. revolution electrical | [U/min] | 12000 |
| **Outputs** | | |
| Electrical design | | HTL/TTL |
| Switching frequency | [kHz] | 1000 |
| Factory setting | | Output function: HTL (50 mA) |
| Short-circuit protection | | yes |
| Phase difference A and B | [°] | 90 |
| **Measuring/setting range** | | |
| Resolution | | 1...10000; (parameterisable; Factory setting: 1024) resolution |

# RO3103

## Incremental encoder with hollow shaft

INCREMENTAL ENCODER BASIC LINE

| | | |
|---|---|---|
| **Accuracy / deviations** | | |
| Accuracy | [°] | 0.1 |
| **Software / programming** | | |
| Parameter setting options | | Resolution; direction of rotation; HTL; TTL |
| **Interfaces** | | |
| Communication interface | | IO-Link |
| Transmission type | | COM2 (38,4 kBaud) |
| IO-Link revision | | 1.1 |
| SIO mode | | yes |
| Min. process cycle time | [ms] | 2.3 |
| **Operating conditions** | | |
| Ambient temperature | [°C] | -40...85 |
| Storage temperature | [°C] | -40...85 |
| Max. relative air humidity | [%] | 95;  (condensation not permissible) |
| Protection | | IP 65; IP 66;  (on the housing: IP 67; on the shaft: IP 65) |
| **Tests / approvals** | | |
| Shock resistance | | 100 g |
| Vibration resistance | | 20 g |
| MTTF | [years] | 292 |
| **Mechanical data** | | |
| Weight | [g] | 435 |
| Dimensions | [mm] | Ø 58.5 / L = 69 |
| Materials | | flange: aluminium; housing: stainless steel (444/1.4521) |
| Tightening torque | [Nm] | < 0.7;  (Mounting screw) |
| Max. revolution, mechanical | [U/min] | 12000 |
| Max. starting torque | [Nm] | 2 |
| Reference temperature torque | [°C] | 20 |
| Shaft design | | hollow shaft open to one side |
| Shaft diameter | [mm] | 9.525 |
| Shaft material | | stainless steel |
| Installation depth of shaft | [mm] | 27 |
| Max. axial shaft misalignment | [mm] | 0,5 |
| Fixing flange | | Ø 58.5 mm |

**Electrical connection**

Connector: 1 x M12, radial, can also be used axially; coding: A; Moulded body: stainless steel (316 / 1.4401); Maximum cable length: 100 m; (IO-Link: max. 20 m)

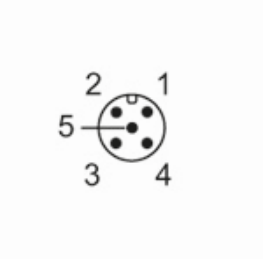

# RO3103

## Incremental encoder with hollow shaft

INCREMENTAL ENCODER BASIC LINE

| IO-Link | |
|---|---|
| 1 | L+ |
| 2 | not to be used |
| 3 | L- |
| 4 | IO-Link |
| 5 | not to be used |
| Screen | plug |

| encoder | |
|---|---|
| 1 | UB |
| 2 | A |
| 3 | GND |
| 4 | Z/0-Pulse (90 deg) |
| 5 | B |
| Screen | plug |

## Diagrams and graphs

Pulse diagram

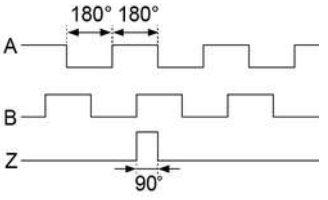


direction of rotation clockwise (looking at the shaft)