PRODUCT DETAILS

**ARTICLE: 35066**

# WHEEL AS 125X40/40 ROLLER BEARING 15



## Wheel series AS

Wheels with cast soft polyurethane coating 87 Sh.A on polyamide 6 center.
Wheel fitted with standard roller bearing.

## Technical data

| | | |
|---|---|---|
| Wheel diameter | D | 125 mm |
| Tyre width | E | 40,0 mm |
| Bore diameter | d | 15 mm |
| Weight article | | 0,420 kg |
| Hub width | L | 40 mm |
| Load Capacity | | 300 kg |

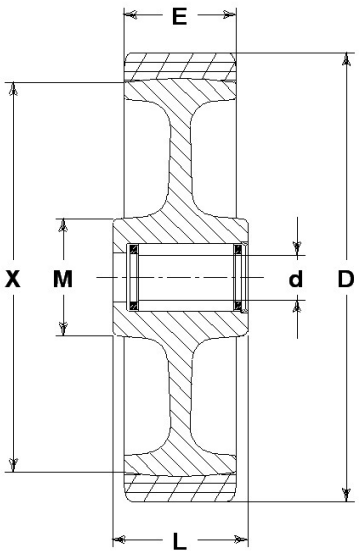


**GENERAL INFORMATION / RECOMMENDATIONS AND WARNINGS**
The cited text and the complete catalogue in their most up-dated versions are available in the OEM's website page www.lagspa.it/downloads. The dimensions, descriptions, specifications and illustrations herein are indicative and subject to variations without notice. The fact that products are illustrated herein does not necessarily imply they are available from stock nor does it place us under any obligation to supply them.
Tests carried out refer to the original products with original accessories: the replacement of one of the components with others of different manufacture might prevent the same results from being achieved and will automatically invalidate any guarantee. Please contact our technical service concerning any special application.