Pomona ELECTRONICS

Technical Data Sheet

Model 2894
Binding Post to Single Banana Plug



Model 2894
Binding Post to Single Banana Plug

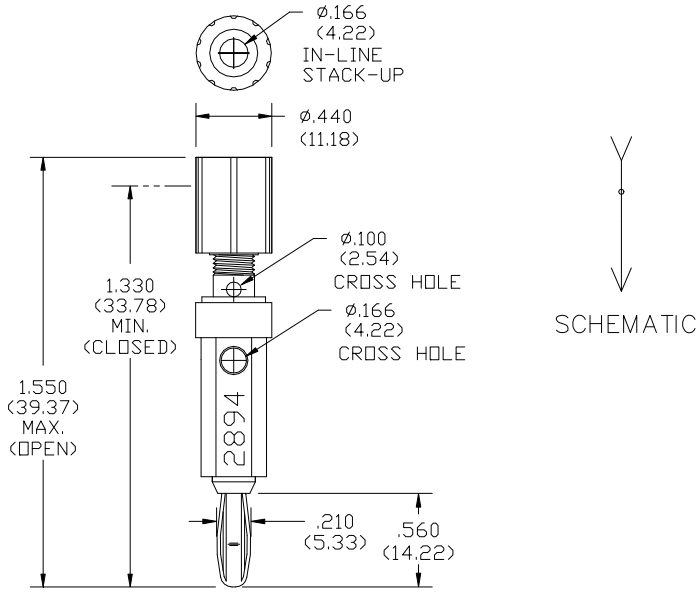

Features

- Features insulated binding post for rapid mounting and interchangeability of components.
- Center cross hole of 4.2mm (.166") dia. provides side stack-up connection.

Materials

Binding Post:

Material:	Body – Brass per QQ-B-626, Alloy 360, ½ Hard.
Finish:	Nickel plate per QQ-N-290, Class 2, 200/300 micro-inches.
Insulation:	Polycarbonate. Color: See Ordering Information

Banana Plug:

Body:	Brass per QQ-B-626, Alloy 360, ½ Hard.
Spring:	Beryllium Copper per QQ-C-533, Alloy 172, Cond.
Finish:	Nickel plate per QQ-N-290, Class 2, 200/300 micro-inches.

Insulation:

Material:	Polypropylene molded to Binding Post and Banana Plug bodies.
Marking:	"2894, POMONA ELECTRONICS, CALIF."

Specifications

Operating Voltage:
Hands free usage in controlled voltage environments: 2500 Vrms maximum.
For CE compliance: not intended for hand-held use at voltages above 33 Vrms/70 Vdc.
Operating Temperature: +50°C (+122°F) Max.
Current: 15 Amperes

Ordering Information

Model: 2894-*
*=Color, -0 (Black), -2 (Red)

Ordering Example: *2894-2 (Color of Binding Post collar is Red)*
Other colors available upon request.

USA: Sales: 800-490-2361
Technical Support: technicalsupport@pomonatest.com
Fax: 425-446-5844
Europe: 31-(0) 40 2675 150 **International:** 425-446-5500
Where to Buy: www.pomonaelectronics.com

All dimensions are in inches. Tolerances (except noted): .xx = ±.02" (,51 mm), .xxx = ± .005" (,127 mm). All specifications are to the latest revisions. Specifications are subject to change without notice. Registered trademarks are the property of their respective companies.

Copyright © 2010