EvoSIGNAL / EvoSIGNAL Accessories

Mini Tube Adaptor RM GY



Part No.: 260.700.05

MECHANICAL DATA	
Height	60 mm
Diameter	62 mm
Materials	PC/ABS
Housing colour	Grey
Protection category	IP66
Cable entry	Through hole
Cable entry maximum	d = 9 mm
Type of fixing	Tube mounting
Working temperature minimum	-30°C
Working temperature maximum	+60°C
UL Type Rating	Type 12
Weight with packaging	44 g
Product weight	40 g

ELECTRICAL DATA	
Pollution degree	3

! For additional installation and mounting information, refer to the appropriate user guide at www.werma.com. This printed copy is for information only and is subject to alteration.

EvoSIGNAL / EvoSIGNAL Accessories

Mini Tube Adaptor RM GY

DRAWING

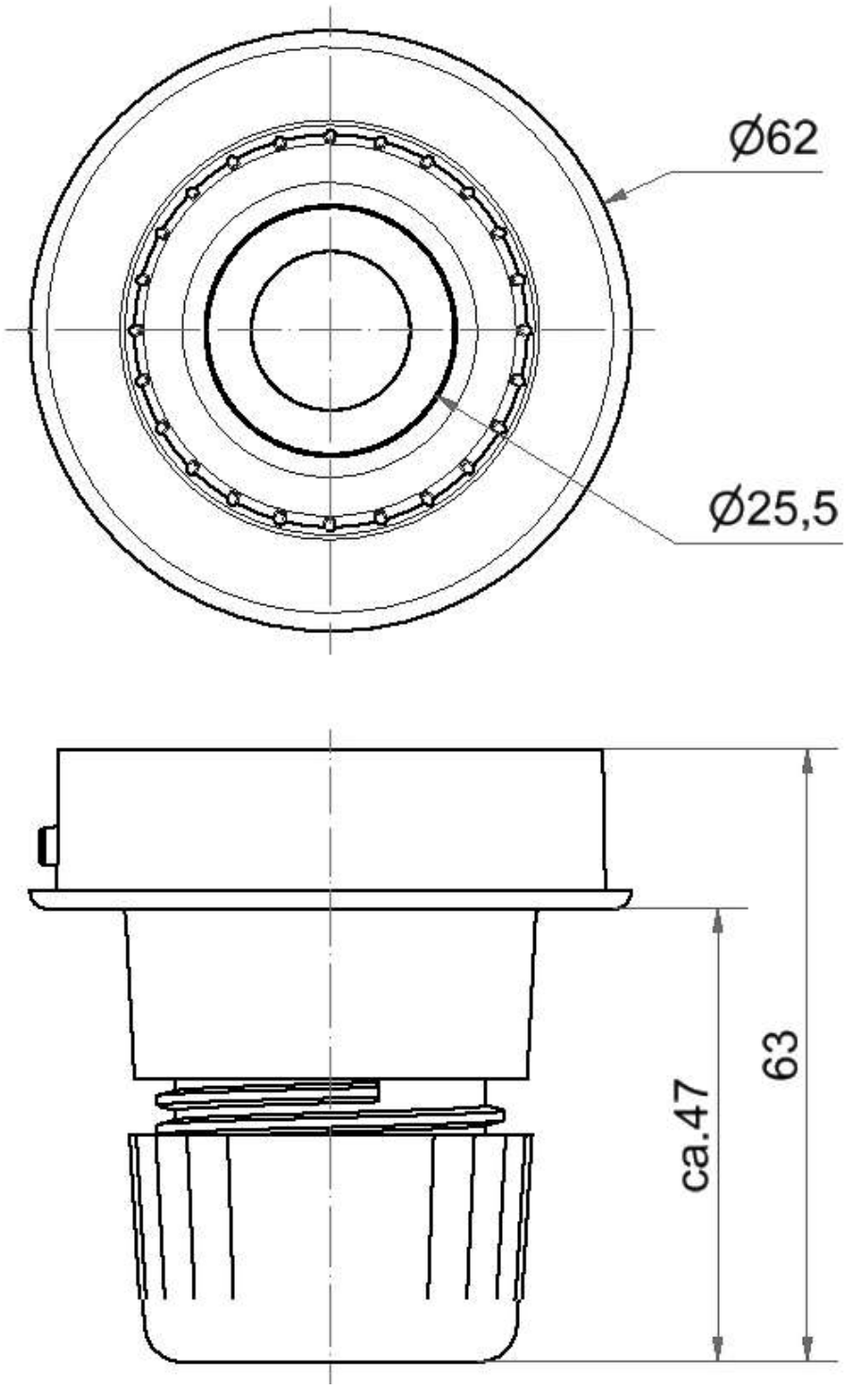

! For additional installation and mounting information, refer to the appropriate user guide at www.werma.com. This printed copy is for information only and is subject to alteration.