S4E315-DC44-09

AC axial panel fan

straight blades (A series)

with guard grille for short nozzle

ebm-papst Mulfingen GmbH & Co. KG
Bachmühle 2 · D-74673 Mulfingen
Phone +49 7938 81-0
Fax +49 7938 81-110
info1@de.ebmpapst.com
www.ebmpapst.com

Limited partnership · Headquarters Mulfingen
Amtsgericht (court of registration) Stuttgart · HRA 590344

General partner Elektrobau Mulfingen GmbH · Headquarters Mulfingen
Amtsgericht (court of registration) Stuttgart · HRB 590142

Nominal data

Type	**S4E315-DC44-09**		
Motor	**M4E068-DF**		
Phase		1~	1~
Nominal voltage	VAC	230	230
Frequency	Hz	50	60
Method of obtaining data		ce	ce
Valid for approval/standard		CE	CE
Speed (rpm)	min^{-1}	1340	1420
Power consumption	W	110	140
Current draw	A	0.50	0.62
Capacitor	µF	3	3
Capacitor voltage	VDB	400	400
Min. ambient temperature	°C	-40	-40
Max. ambient temperature	°C	-	55

ml = Max. load · me = Max. efficiency · fa = Free air · cs = Customer specification · ce = Customer equipment
Subject to change

AC axial panel fan

straight blades (A series)

with guard grille for short nozzle

Technical description

Weight	3.22 kg
Size	315 mm
Motor size	68
Rotor surface	Painted black
Impeller material	Sheet steel, hot-dip galvanized
Guard grille material	Steel, phosphated and coated with black plastic
Number of blades	5
Airflow direction	V
Direction of rotation	Counterclockwise, viewed toward rotor
Degree of protection	IP44; installation- and position-dependent as per EN 60034-5
Insulation class	"F"
Moisture (F) / Environmental (H) protection class	H1+
Max. permitted ambient temp. for motor (transport/storage)	+ 80 °C
Min. permitted ambient temp. for motor (transport/storage)	- 40 °C
Installation position	Shaft horizontal or rotor on bottom; rotor on top on request
Condensation drainage holes	On rotor side
Mode	S1
Motor bearing	Ball bearing with low-temperature lubricant
Speed levels	2
Touch current according to IEC 60990 (measuring circuit Fig. 4, TN system)	< 0.75 mA
Electrical hookup	Terminal box
Motor protection	Thermal switch auto reset, internally connected
With cable	Axial
Protection class assignment	I; If a protective earth is connected by the customer This component for installation may have several local protection classes. This information relates to this component's basic design. The final protection class is based on the component's intended installation and connection.
Motor capacitor according to EN 60252-1 in safety protection class	S0
Conformity with standards	EN 60034-1; EN 60204-1; EN 60335-1; CE
Comment on CE	Ecodesign Directive 2009/125/EC + Fan Directive (EC) No. 327/2011 does not apply, as power consumption <125W.
Approval	CCC; EAC

ebm-papst Mulfingen GmbH & Co. KG · Bachmühle 2 · D-74673 Mulfingen · Phone +49 (0) 7938 81-0 · Fax +49 (0) 7938 81-110 · info1@de.ebmpapst.com · www.ebmpapst.com

AC axial panel fan

straight blades (A series)

with guard grille for short nozzle

Product drawing

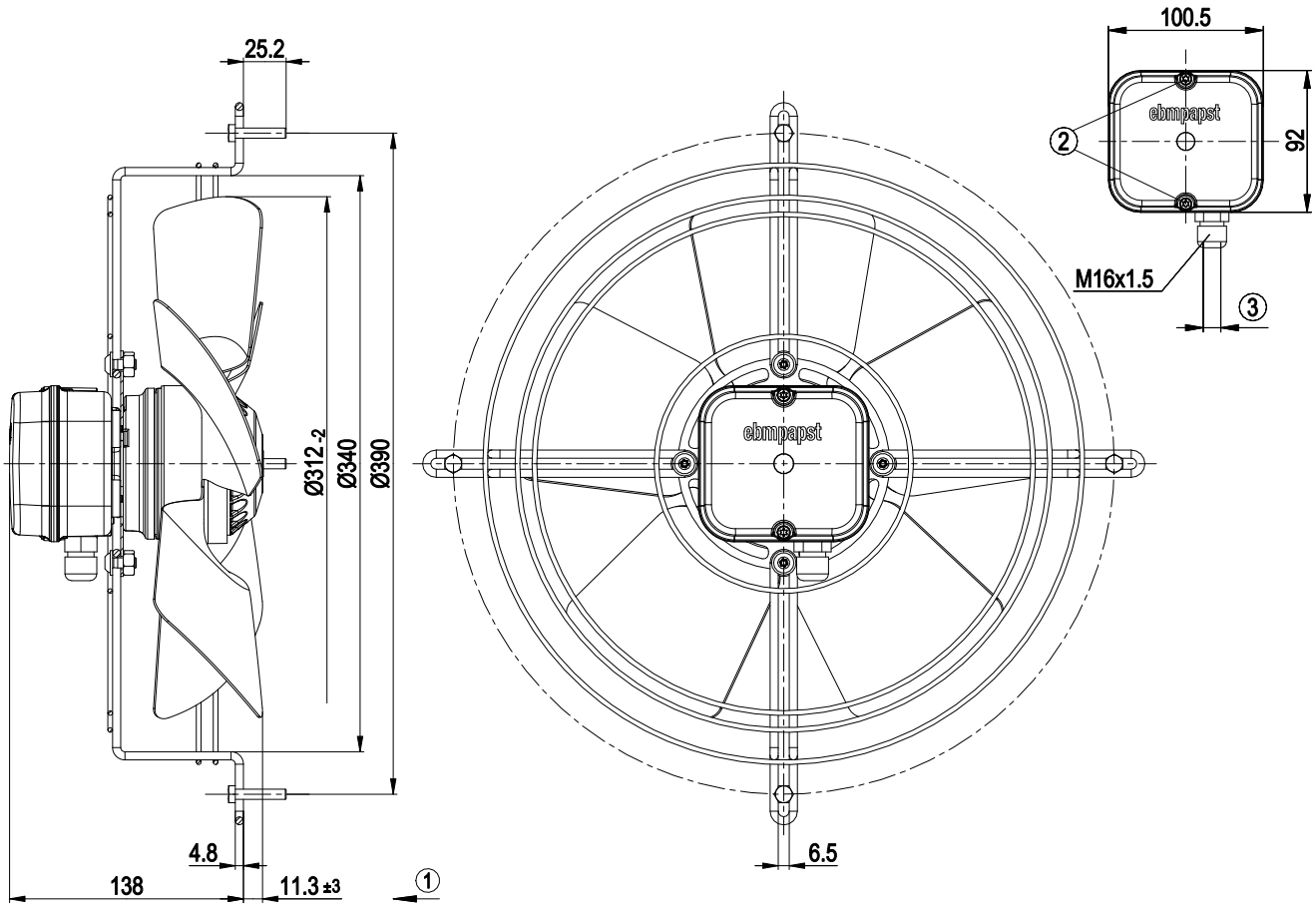

1	Direction of air flow "V"
2	Tightening torque 1.5 ± 0.2 Nm
3	Cable diameter: min. 4 mm, max. 8 mm; tightening torque 1.3 Nm±0.2 Nm

ebm-papst Mulfingen GmbH & Co. KG · Bachmühle 2 · D-74673 Mulfingen · Phone +49 (0) 7938 81-0 · Fax +49 (0) 7938 81-110 · info1@de.ebmpapst.com · www.ebmpapst.com

AC axial panel fan

straight blades (A series)

with guard grille for short nozzle

Connection diagram

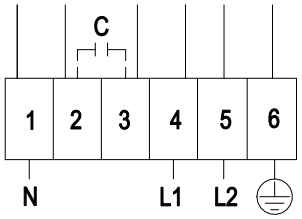

Note: High speed (step II); low speed (step I)

1	= N = blue	2	brown	3	yellow
4	Step I white	5	Step II black	6	PE

ebm-papst Mulfingen GmbH & Co. KG · Bachmühle 2 · D-74673 Mulfingen · Phone +49 (0) 7938 81-0 · Fax +49 (0) 7938 81-110 · info1@de.ebmpapst.com · www.ebmpapst.com

AC axial panel fan

straight blades (A series)

with guard grille for short nozzle

Curves: Air performance 50 Hz

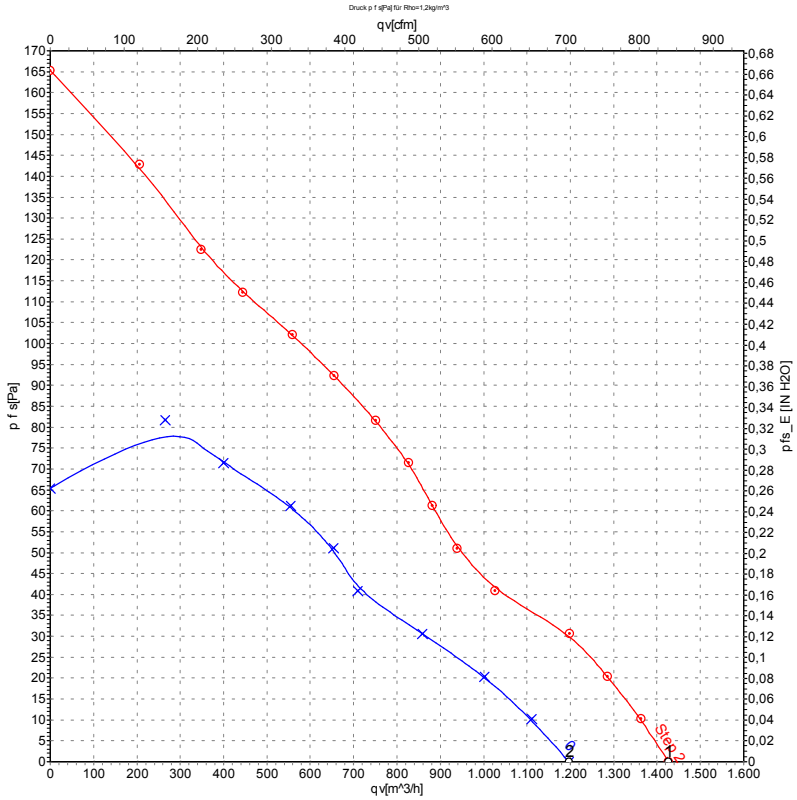

Measurement: LU-30261-1
Date: 1996-10-22

Measurement: LU-30262-1
Date: 1996-10-22

Air performance measured according to ISO 5801 installation category A. For detailed information on the measurement setup, contact ebm-papst. Intake sound level: Sound power level according to ISO 13347 / sound pressure level measured at 1 m distance from fan axis. The values given are valid under the specified measuring conditions and may vary due to conditions of installation. For deviations from the standard configuration, the parameters have to be checked on the installed unit.

Measured values

	Stage	U	f	n	P_e	I	q_V	q_V	p_{fs}
		V	Hz	min^{-1}	W	A	m^3/h	cfm	in. wg
1	2	230	50	1340	110	0.50	1425	840	0.00
2	1	230	50	1125	99	0.43	1195	705	0.00

U = Voltage · f = Frequency · n = Speed (rpm) · P_e = Power consumption · I = Current draw · q_V = Air flow

ebm-papst Mulfingen GmbH & Co. KG · Bachmühle 2 · D-74673 Mulfingen · Phone +49 (0) 7938 81-0 · Fax +49 (0) 7938 81-110 · info1@de.ebmpapst.com · www.ebmpapst.com

AC axial panel fan

straight blades (A series)

with guard grille for short nozzle

Curves: Air performance 60 Hz

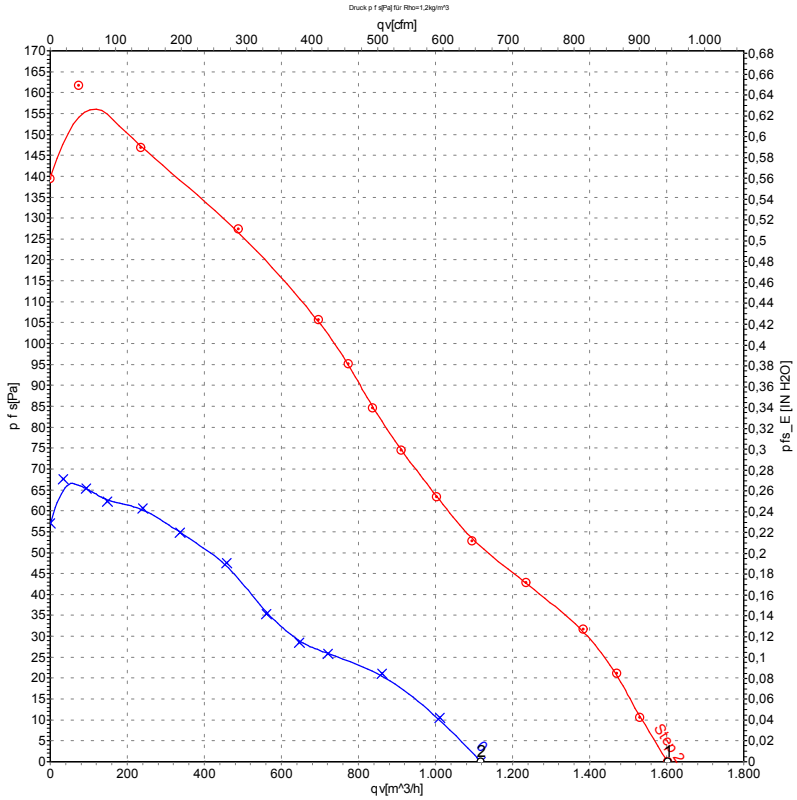

Measurement: LU-50073-1
Date: 2001-08-15

Measurement: LU-50074-1
Date: 2001-08-15

Air performance measured according to ISO 5801 installation category A. For detailed information on the measurement setup, contact ebm-papst. Intake sound level: Sound power level according to ISO 13347 / sound pressure level measured at 1 m distance from fan axis. The values given are valid under the specified measuring conditions and may vary due to conditions of installation. For deviations from the standard configuration, the parameters have to be checked on the installed unit.

Measured values

	Stage	U	f	n	P_e	I	q_V	q_V	p_{fs}
		V	Hz	min^{-1}	W	A	m^3/h	cfm	in. wg
1	2	230	60	1420	140	0.62	1600	945	0.00
2	1	230	60	1010	103	0.45	1120	660	0.00

U = Voltage · f = Frequency · n = Speed (rpm) · P_e = Power consumption · I = Current draw · q_V = Air flow

ebm-papst Mulfingen GmbH & Co. KG · Bachmühle 2 · D-74673 Mulfingen · Phone +49 (0) 7938 81-0 · Fax +49 (0) 7938 81-110 · info1@de.ebmpapst.com · www.ebmpapst.com