

Dimensions

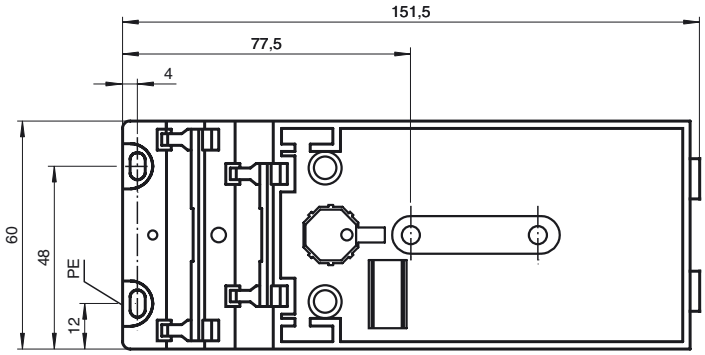

Technical data

Ambient conditions	
Ambient temperature	-25 ... 60 °C (248 ... 333 K)
Storage temperature	-25 ... 85 °C (248 ... 358 K)
Mechanical specifications	
Protection degree	IP67 according to EN 60529 (only in connection with module or cover)
Connection	AS-Interface flat cable
Material	
Housing	PBT
Dimensions	about 80, 45, 34 mm (L, W, H)

Notes

Do not connect inputs and outputs, which are supplied via the module from AS-interface or via auxiliary power, with power supply and signal circuits with external potentials.

Model Number

U-G2FF

AS-Interface module mounting base for connection to flat cable (AS-Interface and external auxiliary power)

Function

The U-G2FF base is used for the connection of the G2 modules with long design to AS-Interface. In case of mounting the module the inserted flat cables are pressed into the contact prongs of the module and connected. For some modules this upper part establishes the connection to earth.

Test-fuer-tabsepattrib
Connection cable

VBA-4E3A-G2-ZA/EA2
AS-Interface sensor/actuator module

VAA-4E4A-G2-ZA/EA2
AS-Interface sensor/actuator module

VBA-4E2A-G2-ZA/EA2-Ex
AS-Interface sensor/actuator module

VBA-4E4A-G2-ZA/EA2
AS-Interface sensor/actuator module

VBA-4E3A-G2-ZA0/EA0
AS-Interface sensor/actuator module

VBA-8E-G2-ZA
AS-Interface sensor module

VAA-4EA-G2-ZE/E2
AS-Interface sensor/actuator module

TESTPRODUKT VBA
Test data sheet

Release date: 2009-09-01 16:16 Date of issue: 2009-09-01 050631_ENG.xml

Subject to modifications without notice
Copyright Pepperl+Fuchs
Pepperl+Fuchs Group www.pepperl-fuchs.com
USA: +1 330 486 0001 fa-info@us.pepperl-fuchs.com
Germany: +49 621 776-4411 fa-info@pepperl-fuchs.com
Singapore: +65 6779 9091 fa-info@sg.pepperl-fuchs.com