Inductive Sensors

BES M08EG-PSC40F-BP02
Order Code: BES0016

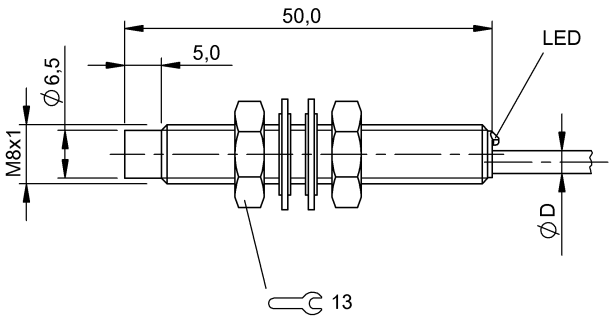

Basic features

Approval/Conformity	CE cULus EAC WEEE
Basic standard	IEC 60947-5-2
Trademark	Global

Display/Operation

Function indicator	yes
Power indicator	no

Electrical connection

Cable diameter D	3.00 mm
Cable length L	2 m
Conductor cross-section	0.14 mm²
Connection type	Cable, 2.00 m, PUR
Electrical version	3-wire
Number of conductors	3
Polarity reversal protected	yes
Protection against device mix-ups	yes
Short-circuit protection	yes

Electrical data

Load capacitance max. at Ue	1.0 µF
No-load current Io max., damped	7 mA
No-load current Io max., undamped	2 mA
Operating voltage Ub	10...30 VDC
Output resistance Ra	33.0 kOhm
Protection class	II
Rated insulation voltage Ui	250 V AC
Rated operating current Ie	200 mA
Rated operating voltage Ue DC	24 V
Rated short circuit current	100 A
Ready delay tv max.	25 ms
Residual current Ir max.	10 µA
Ripple max. (% of Ue)	10 %
Switching frequency	4000 Hz
Utilization category	DC -13
Voltage drop static max.	2.5 V

Environmental conditions

Ambient temperature	-25...70 °C, Temperature drift max. (% Sr) > 15% valid from 50...70 °C
Contamination scale	3
EN 60068-2-27, Shock	Half-sinus, 30 g_n, 11 ms
EN 60068-2-6, Vibration	55 Hz, amplitude 1 mm, 3x30 min
IP rating	IP68

Functional safety

MTTF (40 °C)	595 a

Inductive Sensors

BES M08EG-PSC40F-BP02
Order Code: BES0016

Interface

Switching output	PNP normally open (NO)

Material

Housing material	Stainless steel
Material jacket	PUR
Material sensing surface	PBT

Mechanical data

Dimension	Ø 8 x 50 mm
Installation	non-flush
Size	M8x1
Tightening torque	8 Nm

Range/Distance

Assured operating distance Sa	3.2 mm
Hysteresis H max. (% of Sr)	15.0 %
Rated operating distance Sn	4 mm
Real switching distance sr	4 mm
Repeat accuracy max. (% of Sr)	5.0 %
Switching distance marking	■■
Temperature drift max. (% of Sr)	10 %
Tolerance Sr	±10 %

Remarks

Not for flush mounting: See installation instructions for inductive sensors with extended range 939229.
The sensor is functional again after the overload has been eliminated.
For more information about MTTF and B10d see MTTF / B10d Certificate

Indication of the MTTF- / B10d value does not represent a binding composition and/or life expectancy assurance; these are simply experiential values with no warranty implications. These declared values also do not extend the expiration period for defect claims or affect it in any way.

Wiring Diagrams

