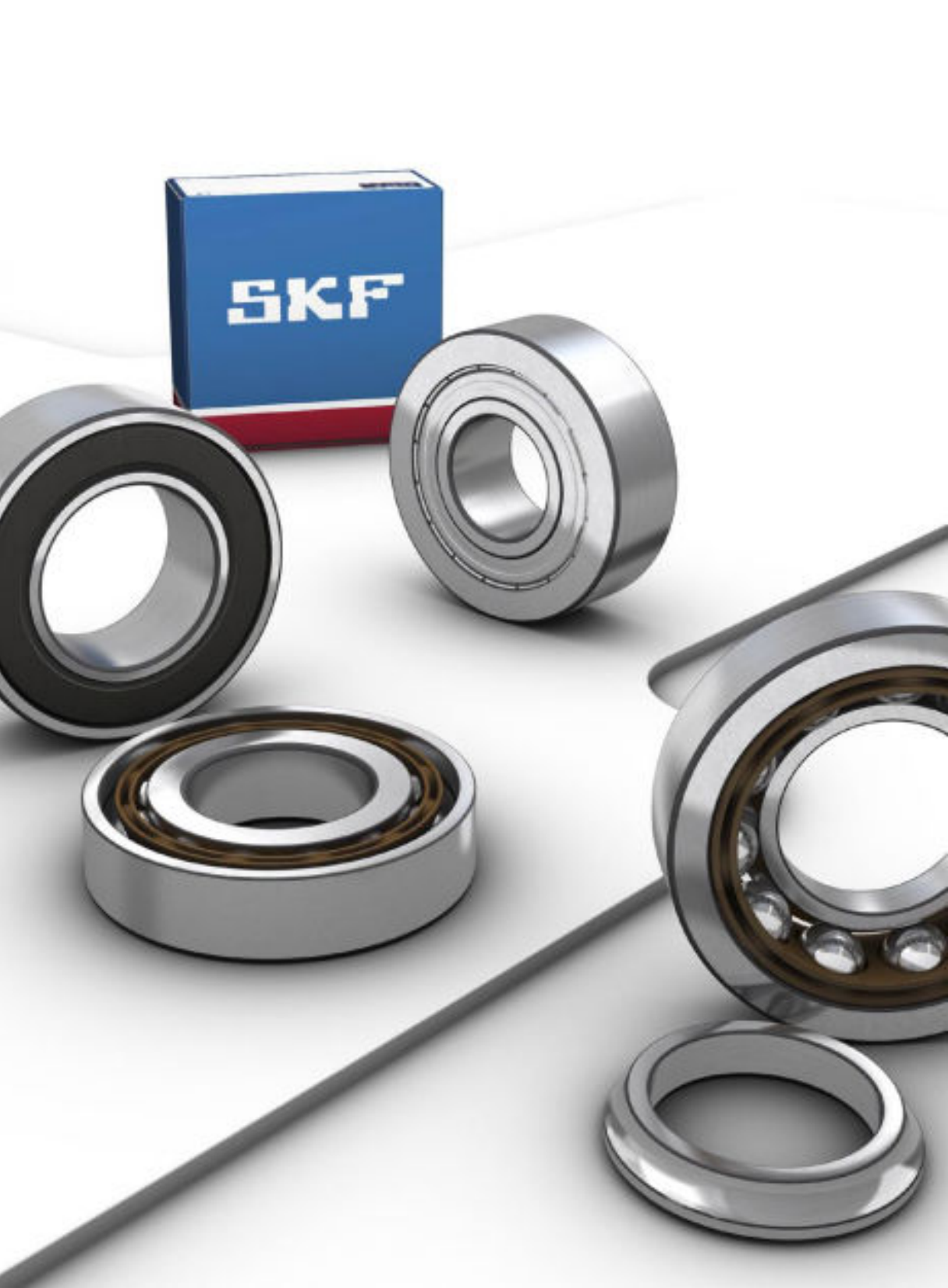
SKF

3 Angular contact ball bearings



Designs and variants **476**
Single row angular contact ball bearings 476
Basic design bearings 477
Bearings for universal matching 477
Double row angular contact ball bearings 478
Basic design bearings 479
Bearings with a two-piece inner ring . 479
Four-point contact ball bearings 480
Cages 481
Sealing solutions 482
Shields 482
Contact seals 482
Greases for capped bearings 483
Locating slots 484

Performance classes **485**
SKF Explorer bearings 485
SKF Energy Efficient (E2) bearings 485

Bearing data **486**
(Dimension standards, tolerances, contact angle, internal clearance, preload, misalignment, friction, starting torque, power loss, defect frequencies)

Loads **492**
(Minimum load, equivalent loads)
Load carrying capacity of bearing pairs 494
Calculating the axial load for bearings mounted singly or paired in tandem . . . 495

Temperature limits **497**

Permissible speed **497**

Design of bearing arrangements **498**
Single row angular contact ball bearings 498
Proper adjustment 498
Axial loads in one direction 498
Load ratio 498
Four-point contact ball bearings 499
Used as a thrust bearing 499
Vertical shafts 499
Load ratio 499

Designation system **504**

Product tables
3.1 Single row angular contact ball bearings 506
3.2 Double row angular contact ball bearings 522
3.3 Capped double row angular contact ball bearings 526
3.4 Four-point contact ball bearings . . 530

Other angular contact ball bearings
Bearings with Solid Oil 1185
SKF DryLube bearings 1191
NoWear coated bearings 1241
Super-precision bearings . . . . . → skf.com/super-precision
Hybrid bearings . . → skf.com/super-precision

Designs and variants

Angular contact ball bearings have raceways in the inner and outer rings that are displaced with respect to each other in the direction of the bearing axis. This means that they are designed to accommodate combined loads, i.e. simultaneously acting radial and axial loads.

The axial load carrying capacity of angular contact ball bearings increases with increasing contact angle. The contact angle is defined as the angle between the line joining the points of contact of the ball and the raceways in the radial plane, along which the load is transmitted from one raceway to another, and a line perpendicular to the bearing axis (→ **fig. 1**).

SKF angular contact ball bearings are manufactured in a wide variety of designs and sizes. The most commonly used designs are:

- single row angular contact ball bearings
- double row angular contact ball bearings
- four-point contact ball bearings

Fig. 1

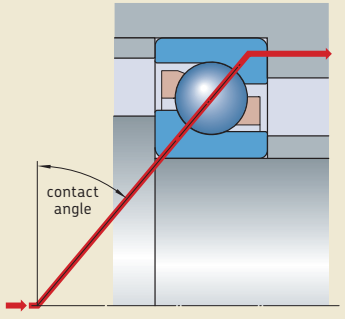

Angular contact ball bearings listed in this catalogue constitute the basic SKF assortment and are only part of the total assortment. Other SKF angular contact ball bearings include:

- Super-precision angular contact ball bearings
  For additional information, refer to the product information available online at skf.com/super-precision.
- Thin section angular contact ball bearings
  For additional information, contact the SKF application engineering service.
- Hub bearing units
  Information about these products can be supplied on request.

Angular contact ball bearings with a larger size than those listed in the product tables are available on request. For information about these bearings, refer to the product information available online at skf.com/bearings, or contact the SKF application engineering service.

Single row angular contact ball bearings

SKF single row angular contact ball bearings (→ **fig. 2**) can accommodate axial loads in one direction only. A single row bearing is typically adjusted against a second bearing.

The bearings are non-separable and the bearing rings have one high and one low shoulder. The low shoulder enables a large number of balls to be incorporated in the bearing, giving it a relatively high load carrying capacity.

More information

Bearing life and load ratings **63**

Design considerations **159**
Bearing systems 160
Recommended fits 169
Abutment and fillet dimensions 208

Lubrication **239**

Mounting, dismounting and bearing care **271**
Mounting instructions for individual bearings . . . . . → skf.com/mount

The standard assortment of SKF single row angular contact ball bearings comprises bearings in the 72 B(E) and 73 B(E) series. Some sizes in the 70 B series are also available. **Matrix 1** (→ **page 500**) provides an overview of the standard assortment. In addition, SKF single row angular contact ball bearings are available in many other designs, dimension series, and sizes. For additional information, refer to the product information available online at skf.com/bearings.

Basic design bearings

Basic design bearings are intended for arrangements where only one bearing is used at each bearing position. They have Normal tolerances concerning bearing width and standout of the rings. Therefore, they are not suitable for mounting immediately adjacent to each other.

Bearings for universal matching

Bearings for universal matching are intended to be used in sets. The width and the standout of the rings are manufactured to close tolerances. When two bearings are mounted immediately adjacent to each other, a given internal clearance or preload or an even load distribution between the two bearings is obtained without the use of shims or similar devices.

Bearings for universal matching can also be beneficial in arrangements with single bearings. Most bearings belong to the SKF Explorer performance class and as such have higher precision, increased load carrying capacity and speed capability.

Bearings for universal matching in the 72 B(E) and 73 B(E) series are identified by the suffix CA, CB or CC for internal clearance or GA, GB or GC for preload. Bearings for universal matching in the 70 B series are identified by the suffix G for clearance. When ordering, indicate the number of individual bearings required and not the number of sets.

Fig. 2

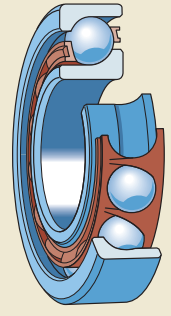

Paired mounting

Paired mounting can be done in three ways (→ **fig. 3**):

- Tandem arrangement
  A tandem arrangement is used when the load carrying capacity of a single bearing is inadequate. When arranged in tandem, the load lines are parallel and the radial and axial loads are equally shared by the bearings. However, the bearing set can accommodate axial loads in one direction only. If axial loads act in both directions, a third bearing, adjusted against the tandem pair, must be added.
- Back-to-back arrangement
  Mounting two bearings back-to-back provides a relatively stiff bearing arrangement, which can also accommodate tilting moments. When arranged back-to-back, the load lines diverge towards the bearing axis. Axial loads in both directions can be accommodated, but only by one bearing in each direction.
- Face-to-face arrangement
  Mounting two bearings face-to-face is not as stiff as a back-to-back arrangement, but less sensitive to misalignment. When arranged face-to-face, the load lines converge towards the bearing axis. Axial loads in both directions can be accommodated, but only by one bearing in each direction.

Double row angular contact ball bearings

SKF double row angular contact ball bearings (→ **fig. 4**) correspond in design to two single row angular contact ball bearings arranged back-to-back, but take up less axial space. They can accommodate radial loads as well as axial loads in both directions. They provide stiff bearing arrangements and are able to accommodate tilting moments.

The standard assortment of SKF double row angular contact ball bearings comprises bearings in the 32 A, 33 A and 33 D series. **Matrix 2** (→ **page 501**) provides an overview of the standard assortment. For information about other double row angular contact ball bearings, refer to the product information available online at skf.com/bearings.

Bearings in the 52 and 53 series, in accordance with ABMA standards, are no longer available from SKF and have been replaced with 32 and 33 series bearings in accordance with ISO. With the exception of size 3200, 32 and 33 series bearings are dimensionally interchangeable with bearings in the 52 and 53 series. Size 3200 has a width of 14 mm instead of 14,3 mm.

Fig. 3

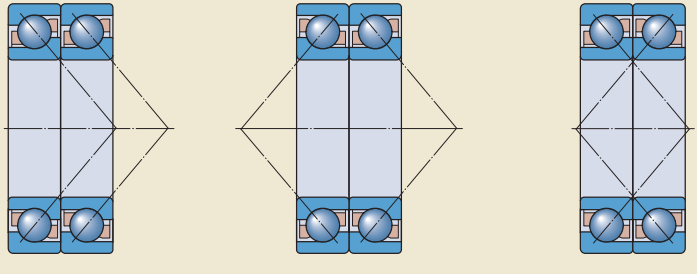

Basic design bearings

Basic design bearings (designation suffix A) have an optimized internal geometry to provide high radial and axial load carrying capacity and quiet operation. Basic design bearings that are also available capped may have recesses in the inner and outer rings (→ **fig. 5**).

Bearings with a two-piece inner ring

Bearings with a two-piece inner ring (→ **fig. 6**) incorporate a large number of large balls, giving the bearing its high load carrying capacity, especially in the axial direction.

Bearings in the 33 D series are separable, i.e. the outer ring with ball and cage assemblies can be mounted independently of the inner ring halves.

Bearings in the 33 DNRCBM series are non-separable. They have a snap ring groove with a snap ring in the outer ring, enabling simple and space-saving axial location in the housing. Bearings in the 33 DNRCBM series have been designed specifically for centrifugal pumps, but can also be used in other applications.

Fig. 4

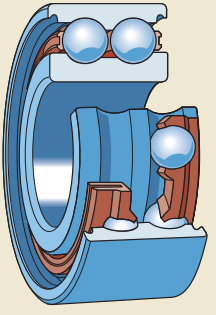

Fig. 5

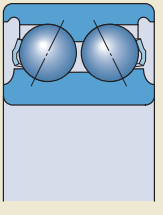

Fig. 6

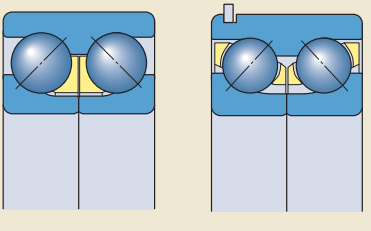

Four-point contact ball bearings

Four-point contact ball bearings (→ **fig. 7**) are radial single row angular contact ball bearings with raceways that are designed to support axial loads in both directions. For a given axial load, a limited radial load can be supported (→ *Load ratio*, **page 499**). These bearings take up considerably less axial space than double row bearings.

The inner ring is split. This enables a large number of balls to be incorporated in the bearing, giving the bearing its high load carrying capacity. The bearings are separable, i.e. the outer ring with ball and cage assembly can be mounted separately from the two inner ring halves.

Both inner ring halves of SKF Explorer four-point contact ball bearings have a recessed shoulder. This improves oil flow when the bearing is used together with an SKF cylindrical roller bearing (→ **fig. 12**, **page 499**). In addition, these recesses can be used to facilitate dismounting.

The standard assortment of SKF four-point contact ball bearings comprises bearings in the QJ 2 and QJ 3 series. **Matrix 3** (→ **page 502**) provides an overview of the standard assortment. For information about other four-point contact ball bearings, refer to the product information available online at skf.com/bearings.

Fig. 7

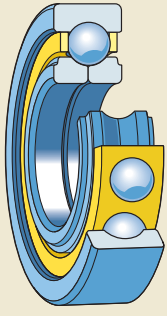

Cages for single row angular contact ball bearings
Standard assortment → **matrix 1**, **page 500**

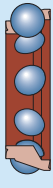

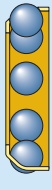

Cage type	Window-type, ball centred		Window-type, ball centred
Material	PA66, glass fibre reinforced	PEEK, glass fibre reinforced	Stamped brass, stamped steel[1)]
Suffix	P	PH	Y, J[1)]

[1)] Check availability prior to ordering

Cages

Depending on their design, series and size, SKF angular contact ball bearings are fitted with one of the cages shown in **table 1**. Double row bearings are equipped with two cages. The stamped steel cage in double row bearings is not identified in the bearing designation. For information about the availability of cages for the various bearing designs, series and sizes, refer to **matrices 1** to **3** (→ **pages 500** to **502**).

The lubricants generally used for rolling bearings do not have a detrimental effect on cage properties. However, some synthetic oils and greases with a synthetic oil base and lubricants containing a high proportion of EP additives, when used at high temperatures, can have a detrimental effect on polyamide cages. For additional information about the suitability of cages, refer to *Cages* (→ **page 37**) and *Cage materials* (→ **page 152**).

Table 1

	Cages for double row angular contact ball bearings Standard assortment → **matrix 2**, **page 501**					**Cages for four-point contact ball bearings** Standard assortment → **matrix 3**, **page 502**	
	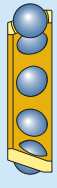	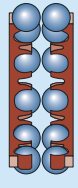	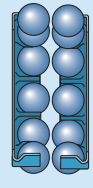	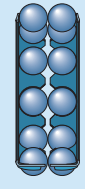	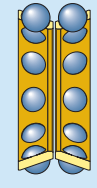	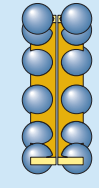	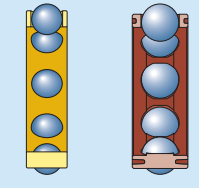
	Window-type, ball centred	Snap-type, ball centred	Snap-type, ball centred	Snap-type, crown, ball centred	Window-type, ball centred	Prong-type, outer ring centred	Window-type, outer ring centred	Window-type, lubrication grooves in the guiding surface, outer ring centred
	Machined brass, machined steel[1)]	PA66, glass fibre reinforced	Stamped steel	Stamped steel	Machined brass	Machined brass	Machined brass	PEEK, glass fibre reinforced
	M, F[1)]	TN9	–	–	M	MA	MA	PHAS

Sealing solutions

SKF supplies the most common basic design double row angular contact ball bearings capped with a contact seal or shield on both sides (→ **matrix 2**, **page 501**). For additional information about the suitability of seals or shields under various conditions, refer to *Sealing solutions* (→ **page 226**).

Bearings capped on both sides are lubricated for the life of the bearing and should not be washed or relubricated. The bearings are considered maintenance-free. If they are to be hot mounted, an induction heater should be used. SKF does not recommend heating capped bearings above 80 °C *(175 °F)*. However, if higher temperatures are necessary make sure that the temperature does not exceed the permissible temperature of either the seal or grease, whichever is lowest. During start-up, grease may leak at the inner ring. For bearing arrangements where this would be detrimental, special design steps must be undertaken. For additional information, contact the SKF application engineering service.

Shields

Shields are made of sheet steel. SKF supplies shields in two designs. The shields used in smaller bearings have an extension in the shield bore to form a long, narrow gap with the land of the inner ring shoulder (→ **fig. 8a**). The shields used in larger bearings and in all SKF Explorer bearings extend into a recess on the inner ring (→ **fig. 8b**).

SKF double row angular contact ball bearings with a shield on both sides are identified by the designation suffix 2Z.

Contact seals

Contact seals (→ **fig. 9**) are made of NBR and are reinforced with a sheet steel insert. These seals, which are fitted in a recess on the outer ring, make good, positive contact with the recess. The seal lip exerts light pressure against the recess on the inner ring to provide an effective seal.

SKF double row angular contact ball bearings with a contact seal on both sides are identified by the designation suffix 2RS1.

Fig. 8

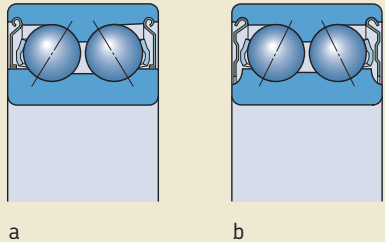

Fig. 9

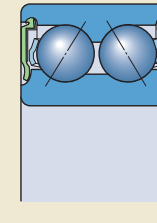

Greases for capped bearings

Capped double row angular contact ball bearings are filled with one of the following greases (→ **table 2**):

- The standard grease is GJN.
- In Europe, MT33 is commonly used and widely available.
- SKF Energy Efficient angular contact ball bearings are filled with the low-friction grease GE2.
- Other greases listed in **table 2** can be supplied on request.

The standard grease is not identified in the bearing designation (no designation suffix). Other greases are indicated by the corresponding grease suffix.

Table 2

Technical specifications of SKF standard and special greases for capped double row angular contact ball bearings

Grease	Temperature range[1)] –50 0 50 100 150 200 250 °C / –60 30 120 210 300 390 480 °F	Thickener	Base oil type	NLGI consistency class	Base oil viscosity [mm²/s] at 40 °C (105 °F)	at 100 °C (210 °F)
GJN		Polyurea soap	Mineral	2	115	12,2
MT33		Lithium soap	Mineral	3	100	10
VT113		Lithium complex	Mineral paraffinic	3	113	12,1
WT		Polyurea soap	Ester	2-3	70	9,4
GWF		Diurea	Synthetic SHC/ether	2-3	67,5	9,6
GE2		Lithium soap	Synthetic	2	25	4,9

1) Refer to the SKF traffic light concept → **page 244**

Locating slots

SKF four-point contact ball bearings can be supplied with two locating slots in the outer ring (→ **fig. 10**) to prevent it from turning (designation suffix N2). The locating slots are positioned 180° apart. The dimensions and tolerances of the locating slots are in accordance with ISO 20515 and are listed in **table 3**. Some SKF single row angular contact ball bearings can be supplied with one locating slot in the outer ring (designation suffix N1).

Fig. 10

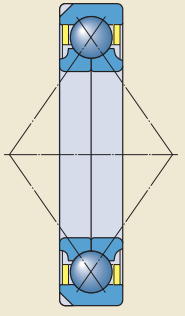

Table 3

Locating slots in the outer ring of four-point contact ball bearings

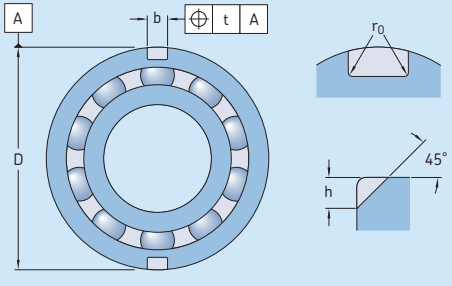

Outside diameter D		Dimensions Diameter series 2			Diameter series 3			Tolerance[1]
over	incl.	h	b	r_0	h	b	r_0	t max.
mm		mm						mm
35	**45**	2,5	3,5	0,5	–	–	–	0,2
45	**60**	3	4,5	0,5	3,5	4,5	0,5	0,2
60	**72**	3,5	4,5	0,5	3,5	4,5	0,5	0,2
72	**95**	4	5,5	0,5	4	5,5	0,5	0,2
95	**115**	5	6,5	0,5	5	6,5	0,5	0,2
115	**130**	6,5	6,5	0,5	8,1	6,5	1	0,2
130	**145**	8,1	6,5	1	8,1	6,5	1	0,2
145	**170**	8,1	6,5	1	10,1	8,5	2	0,2
170	**190**	10,1	8,5	2	11,7	10,5	2	0,2
190	**210**	10,1	8,5	2	11,7	10,5	2	0,2
210	**240**	11,7	10,5	2	11,7	10,5	2	0,2
240	**270**	11,7	10,5	2	11,7	10,5	2	0,2
270	**400**	12,7	10,5	2	12,7	10,5	2	0,4

[1] Other tolerances are in accordance with ISO 20515.

Performance classes

SKF Explorer bearings

In response to the ever-demanding performance requirements of modern machinery, SKF developed the SKF Explorer performance class of rolling bearings.

SKF Explorer angular contact ball bearings realized this substantial improvement in performance by optimizing the internal geometry and surface finish of all contact surfaces, redesigning the cage, combining the extremely clean and homogenous steel with a unique heat treatment and improving the quality and consistency of the balls.

These improvements provide the following benefits:

- higher dynamic load carrying capacity
- less sensitivity to heavy axial loads
- improved wear-resistance
- reduced noise and vibration levels
- less frictional heat
- significantly longer bearing service life

These bearings reduce environmental impact by enabling downsizing and reducing both lubricant and energy consumption. Just as importantly, SKF Explorer bearings can reduce the need for maintenance and contribute to increased productivity.

SKF Explorer bearings are shown with an asterisk in the product tables. The bearings retain the designation of earlier standard bearings. However, each bearing and its box are marked with the name “SKF Explorer”.

SKF Energy Efficient (E2) bearings

To meet the ever-increasing demand to reduce friction and energy consumption, SKF has developed the SKF Energy Efficient (E2) performance class of rolling bearings. Angular contact ball bearings within this performance class are characterized by a frictional moment in the bearing that is at least 30% lower when compared to a same-sized standard SKF bearing. Due to the reduction of the frictional moment, SKF E2 double row angular contact ball bearings run up to 20 °C *(35 °F)* cooler than standard bearings. This extends grease life and potentially bearing service life.

The bearings realized the substantial reduction of the frictional moment by optimizing the internal geometry of the bearing and applying a new, low-friction grease.

SKF E2 double row angular contact ball bearings are available in the 32 and 33 dimension series (→ **matrix 2**, **page 501**). The bearings are equipped with a shield on both sides and lubricated for the life of the bearing.

Bearing data

	Single row angular contact ball bearings
Dimension standards	Boundary dimensions: ISO 15 and ISO 12044
Tolerances	Normal
	SKF Explorer bearings P6 dimensional accuracy P5 running accuracy
For additional information (→ **page 132**)	Values: ISO 492, (→ **tables 3** to **5**, **pages 137** to **139**)
Contact angle	40° For a 25° or 30° contact angle, contact SKF.
Internal clearance For additional information (→ **page 149**)	Pairs of universally matchable bearings: CB (normal), G Availability CA and CC: (→ **matrix 1**, **page 500**) Values: (→ **table 5**, **page 488**) Values apply to unmounted bearing sets, arranged back-to-back or face-to-face under zero measuring load.
Preload For additional information (→ **page 214**)	Pairs of universally matchable bearings: GA (light preload) Availability GB and GC: (→ **matrix 1**, **page 500**) Values: (→ **table 6**, **page 489**) Values apply to unmounted bearing sets, arranged back-to-back or face-to-face.
Misalignment	Bearing pairs arranged back-to-back: ≈ 2 minutes of arc Bearing pairs arranged face-to-face: ≈ 4 minutes of arc
	The permissible angular misalignment between the inner and outer rings depends on the size and internal design of the bearing, the radial internal clearance in operation and the forces and moments acting on the ...
Friction, starting torque, power loss	Frictional moment, starting torque, and power loss can be calculated as specified under *Friction* (→ **page 97**), or using the tools ...
Defect frequencies	Defect frequencies can be calculated using the tools ...

	Double row angular contact ball bearings	Four-point contact ball bearings
	Boundary dimensions: ISO 15, except for the width of bearing 3200 A Snap rings and grooves: ISO 464, (→ **table 4**, **page 488**)	Boundary dimensions: ISO 15 Locating slots: ISO 20515, (→ **table 3**, **page 484**)
	Normal	Normal P6 on request
	SKF Explorer and SKF E2 bearings, 33 DNRCBM series P6	**SKF Explorer** P6 and width tolerance reduced to 0/–40 µm
	32 A and 33 A series: 30° 33 D series: 45° 33 DNRCBM series: 40°	35°
	Normal Availability: C3 (→ **matrix 2**, **page 501**); for C2 contact SKF Values: (→ **table 7**, **page 489**)	Normal Check availability of C2, C3, C4 or reduced ranges of standard clearance classes Values: ISO 5753-2, (→ **table 8**, **page 490**)
	–	–
	≈ 2 minutes of arc	≈ 2 minutes of arc

... bearing. As a result, only approximate values are listed here. Any misalignment increases bearing noise and reduces bearing service life.

... available online at skf.com/bearingcalculator.

... available online at skf.com/bearingcalculator.

Table 4

Dimensions of snap ring grooves and snap rings

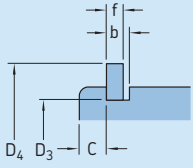

Bearing Designation	Dimensions					Snap ring Designation
	C	b	f	D_3	D_4	
–	mm					–
3308 DNRCBM	3,28	2,7	2,46	86,8	96,5	**SP 90**
3309 DNRCBM	3,28	2,7	2,46	96,8	106,5	**SP 100**
3310 DNRCBM	3,28	2,7	2,46	106,8	116,6	**SP 110**
3311 DNRCBM	4,06	3,4	2,82	115,2	129,7	**SP 120**
3313 DNRCBM	4,06	3,4	2,82	135,2	149,7	**SP 140**

Table 5

Axial internal clearance of universally matchable single row angular contact ball bearings arranged back-to-back or face-to-face

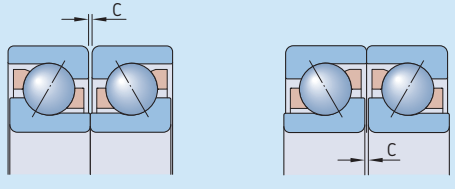

Bore diameter d		Axial internal clearance Class							
		CA		CB		CC		G	
over	incl.	min.	max.	min.	max.	min.	max.	min.	max.
mm		µm							
–	**18**	5	13	15	23	24	32	–	–
18	**30**	7	15	18	26	32	40	–	–
30	**50**	9	17	22	30	40	48	–	–
50	**80**	11	23	26	38	48	60	–	–
80	**120**	14	26	32	44	55	67	–	–
120	**160**	17	29	35	47	62	74	26	76
160	**180**	17	29	35	47	62	74	20	72
180	**250**	21	37	45	61	74	90	20	72
250	**280**	–	–	–	–	–	–	20	72

Table 6

Preload of universally matchable single row angular contact ball bearings arranged back-to-back or face-to-face

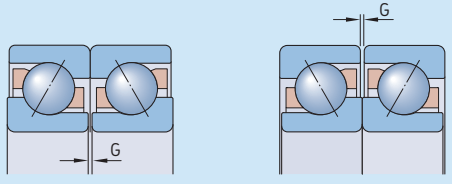

Bore diameter		Preload Class										
d		GA			GB				GC			
over	incl.	min.	max.	max.	min.	max.	min.	max.	min.	max.	min.	max.
mm		µm		N	µm		N		µm		N	
10	**18**	+4	–4	80	–2	–10	30	330	–8	–16	230	660
18	**30**	+4	–4	120	–2	–10	40	480	–8	–16	340	970
30	**50**	+4	–4	160	–2	–10	60	630	–8	–16	450	1 280
50	**80**	+6	–6	380	–3	–15	140	1 500	–12	–24	1 080	3 050
80	**120**	+6	–6	410	–3	–15	150	1 600	–12	–24	1 150	3 250
120	**180**	+6	–6	540	–3	–15	200	2 150	–12	–24	1 500	4 300
180	**250**	+8	–8	940	–4	–20	330	3 700	–16	–32	2 650	7 500

Table 7

Axial internal clearance of double row angular contact ball bearings

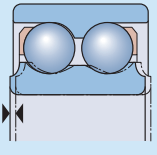

Bore diameter		Axial internal clearance of bearings in the series 32 A and 33 A								33 D		33 DNRCBM	
d		C2		Normal		C3		C4					
over	incl.	min.	max.	min.	max.	min.	max.	min.	max.	min.	max.	min.	max.
mm		µm								µm		µm	
–	**10**	1	11	5	21	12	28	25	45	25	45	–	–
10	**18**	1	12	6	23	13	31	27	47	27	47	–	–
18	**24**	2	14	7	25	16	34	28	48	27	47	6	26
24	**30**	2	15	8	27	18	37	30	50	30	50	6	26
30	**40**	2	16	9	29	21	40	33	54	33	54	10	30
40	**50**	2	18	11	33	23	44	36	58	36	58	10	30
50	**65**	3	22	13	36	26	48	40	63	40	63	18	38
65	**80**	3	24	15	40	30	54	46	71	46	71	18	38
80	**100**	3	26	18	46	35	63	55	83	55	83	–	–
100	**110**	4	30	22	53	42	73	65	96	65	96	–	–

Table 8

Axial internal clearance of four-point contact ball bearings

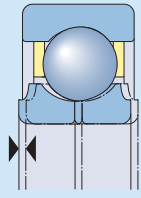

Bore diameter d		Axial internal clearance							
		C2		Normal		C3		C4	
over	incl.	min.	max.	min.	max.	min.	max.	min.	max.
mm		µm							
10	**18**	15	65	50	95	85	130	120	165
18	**40**	25	75	65	110	100	150	135	185
40	**60**	35	85	75	125	110	165	150	200
60	**80**	45	100	85	140	125	175	165	215
80	**100**	55	110	95	150	135	190	180	235
100	**140**	70	130	115	175	160	220	205	265
140	**180**	90	155	135	200	185	250	235	300
180	**220**	105	175	155	225	210	280	260	330

3

Loads

	Single row angular contact ball bearings	Double row angular contact ball bearings
Minimum load	**Minimum axial load** for single bearings and bearing pairs arranged in tandem: $F_{am} = k_a \frac{C_0}{1\,000} \left(\frac{n\, d_m}{100\,000} \right)^2$	–
	Minimum radial load for bearing pairs arranged back-to-back or face-to-face: $F_{rm} = k_r \left(\frac{\nu\, n}{1\,000} \right)^{2/3} \left(\frac{d_m}{100} \right)^2$	**Minimum radial load:** $F_{rm} = k_r \left(\frac{\nu\, n}{1\,000} \right)^{2/3} \left(\frac{d_m}{100} \right)^2$
For additional information (→ **page 86**)	The weight of the components supported by the bearing, together with external forces, generally exceed the requisite minimum load. If this is not the case, the bearing must be subjected to an additional load. Single row bearings, bearing pairs arranged in tandem and four-point bearings can ...	
Equivalent dynamic bearing load	Single bearings and bearing pairs arranged in tandem: $F_a/F_r \leq 1{,}14$[1] → $P = F_r$ $F_a/F_r > 1{,}14$[1] → $P = 0{,}35\, F_r + 0{,}57\, F_a$	$F_a/F_r \leq e$ → $P = F_r + Y_1\, F_a$ $F_a/F_r > e$ → $P = X\, F_r + Y_2\, F_a$
For additional information (→ **page 85**)	Bearing pairs arranged back-to-back or face-to-face: $F_a/F_r \leq 1{,}14$ → $P = F_r + 0{,}55\, F_a$ $F_a/F_r > 1{,}14$ → $P = 0{,}57\, F_r + 0{,}93\, F_a$	
Equivalent static bearing load	Single bearings and bearing pairs arranged in tandem: $P_0 = 0{,}5\, F_r + 0{,}26\, F_a$[1] $P_0 < F_r$ → $P_0 = F_r$	$P_0 = F_r + Y_0\, F_a$
For additional information (→ **page 88**)	Bearing pairs arranged back-to-back or face-to-face: $P_0 = F_r + 0{,}52\, F_a$	

[1] When determining the axial load F_a, refer to *Calculating the axial load for bearings mounted singly or paired in tandem* (→ **page 495**).

	Four-point contact ball bearings
	Minimum axial load: $F_{am} = k_a \frac{C_0}{1\,000} \left(\frac{n\, d_m}{100\,000} \right)^2$
	–
	… be axially preloaded by adjusting the inner or outer rings against each other or by using springs, whereas double row bearings must be subjected to an additional radial load.
	Locating bearings to accommodate radial and axial load: $F_a/F_r \leq 0{,}95$ [2] → $P = F_r + 0{,}66\, F_a$ $F_a/F_r > 0{,}95$ [2] → $P = 0{,}6\, F_r + 1{,}07\, F_a$
	Thrust bearings with radial freedom in combination with a radial bearing: $P = 1{,}07\, F_a$
	$P_0 = F_r + 0{,}58\, F_a$

Symbols

C_0 = basic static load rating [kN] (→ **product tables**)
d_m = bearing mean diameter [mm] = 0,5 (d + D)
e = calculation factor for double row bearings (→ **table 10**, **page 494**)
F_a = axial load [kN]
F_{am} = minimum axial load [kN]
F_r = radial load [kN]
F_{rm} = minimum radial load [kN]
k_a = minimum axial load factor (→ **table 9**, **page 494**)
k_r = minimum radial load factor (→ **table 9**, **page 494**)
n = rotational speed [r/min]
P = equivalent dynamic bearing load [kN]
P_0 = equivalent static bearing load [kN]
X, Y_0, Y_1, Y_2 = calculation factors for double row bearings, depending on the bearing series (→ **table 10**, **page 494**)
ν = oil viscosity at operating temperature [mm^2/s]

[2] For a proper function, SKF recommends the axial load $F_a \geq 1{,}27\, F_r$.

Table 9

Minimum load factors

Bearing series	Minimum load factors k_a	k_r
Single row bearings		
70 B	0,9	0,083
72 BE	1,4	0,095
72 B	1,2	0,08
73 BE	1,6	0,1
73 B	1,4	0,09
Double row bearings		
32 A	–	0,06
33 A	–	0,07
33 D	–	0,095
33 DNRCBM	–	0,095
Four-point contact bearings		
QJ 2	1	–
QJ 3	1,1	–

Load carrying capacity of bearing pairs

The values for basic load ratings and fatigue load limits listed in the product tables apply to single bearings. For bearing pairs mounted immediately adjacent to each other the following values apply:

- basic dynamic load rating for standard bearings in all arrangements and for SKF Explorer bearings in a back-to-back or face-to-face arrangement
  $C = 1{,}62\ C_{\text{single bearing}}$
- basic dynamic load rating for SKF Explorer bearings in a tandem arrangement
  $C = 2\ C_{\text{single bearing}}$
- basic static load rating
  $C_0 = 2\ C_{0\ \text{single bearing}}$
- fatigue load limit
  $P_u = 2\ P_{u\ \text{single bearing}}$

Table 10

Calculation factors for double row angular contact ball bearings

Bearing series	Calculation factors e	X	Y_1	Y_2	Y_0
32 A, 33 A	0,8	0,63	0,78	1,24	0,66
33 D	1,34	0,54	0,47	0,81	0,44
33 DNRCBM	1,14	0,57	0,55	0,93	0,52

Calculating the axial load for bearings mounted singly or paired in tandem

When a radial load is applied to a single row angular contact ball bearing, the load is transmitted from one raceway to the other at an angle to the bearing axis and an internal axial load is induced. This must be considered when calculating the equivalent bearing loads for bearing arrangements consisting of two single bearings and/or bearing pairs arranged in tandem.

The necessary equations are provided in **table 11** (→ **page 496**), for the various bearing arrangements and load cases. The equations are only valid if the bearings are adjusted against each other to practically zero clearance, but without any preload. In the arrangements shown, bearing A is subjected to a radial load F_{rA} and bearing B to a radial load F_{rB}. Both F_{rA} and F_{rB} are always considered positive, even when they act in the direction opposite to what is shown in the figures. The radial loads act at the pressure centres of the bearings (→ distance a in the product tables).

The variable R from **table 11** (→ **page 496**) takes into account the contact conditions inside the bearing. The values for R can be obtained from **diagram 1**, as a function of the ratio K_a/C. K_a is the external axial force acting on the shaft or on the housing and C is the basic dynamic load rating of the bearing, which must accommodate the external axial force. Use R = 1 for $K_a = 0$.

Diagram 1

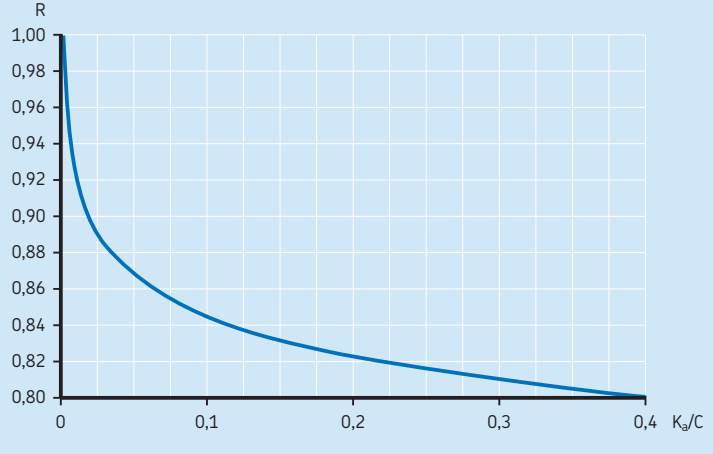

Table 11

Axial loading of bearing arrangements incorporating two single row B or BE design angular contact ball bearings and/or bearing pairs in tandem

Bearing arrangement	Load case	Axial loads	
Back-to-back 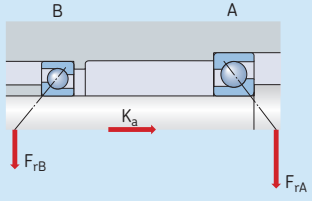	**Case 1a** $F_{rA} \geq F_{rB}$ $K_a \geq 0$	$F_{aA} = R\,F_{rA}$	$F_{aB} = F_{aA} + K_a$
	Case 1b $F_{rA} < F_{rB}$ $K_a \geq R\,(F_{rB} - F_{rA})$	$F_{aA} = R\,F_{rA}$	$F_{aB} = F_{aA} + K_a$
Face-to-face 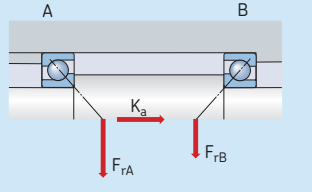	**Case 1c** $F_{rA} < F_{rB}$ $K_a < R\,(F_{rB} - F_{rA})$	$F_{aA} = F_{aB} - K_a$	$F_{aB} = R\,F_{rB}$
Back-to-back 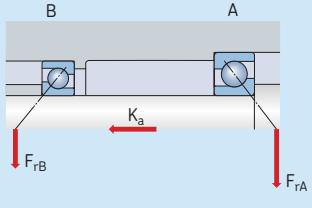	**Case 2a** $F_{rA} \leq F_{rB}$ $K_a \geq 0$	$F_{aA} = F_{aB} + K_a$	$F_{aB} = R\,F_{rB}$
	Case 2b $F_{rA} > F_{rB}$ $K_a \geq R\,(F_{rA} - F_{rB})$	$F_{aA} = F_{aB} + K_a$	$F_{aB} = R\,F_{rB}$
Face-to-face 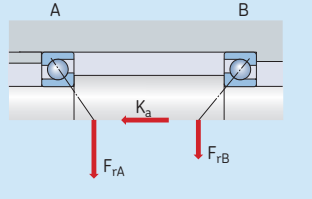	**Case 2c** $F_{rA} > F_{rB}$ $K_a < R\,(F_{rA} - F_{rB})$	$F_{aA} = R\,F_{rA}$	$F_{aB} = F_{aA} - K_a$

Temperature limits

The permissible operating temperature for angular contact ball bearings can be limited by:

- the dimensional stability of the bearing rings and balls
- the cage
- the seals
- the lubricant

When temperatures outside the permissible range are expected, contact the SKF application engineering service.

Bearing rings and balls

SKF angular contact ball bearings undergo a special heat treatment. The bearings are heat stabilized up to at least 150 °C *(300 °F)*.

Cages

Steel, brass or PEEK cages can be used at the same operating temperatures as the bearing rings and balls. For temperature limits of cages made of other polymer materials, refer to *Cage materials* (→ **page 152**).

Seals

The permissible operating temperature for NBR seals is –40 to +100 °C *(–40 to +210 °F)*. Temperatures up to 120 °C *(250 °F)* can be tolerated for brief periods.

Lubricants

Temperature limits for greases used in capped SKF angular contact ball bearings are provided in **table 2** (→ **page 483**). Temperature limits for other SKF greases are provided under *Lubrication* (→ **page 239**).

When using lubricants not supplied by SKF, the temperature limits should be evaluated according to the SKF traffic light concept (→ **page 244**).

Permissible speed

The permissible speed can be estimated using the speed ratings listed in the product tables and applying the information provided under *Speeds* (→ **page 117**). If no reference speed is listed in the product tables, the limiting speed is the permissible speed.

Bearing pairs

For bearings arranged in pairs, the permissible speed calculated for a single bearing should be reduced to approximately 80% of the quoted value.

Design of bearing arrangements

Single row angular contact ball bearings

Proper adjustment

Single row angular contact ball bearings must either be used with a second bearing or in sets (→ **fig. 11**). The bearings must be adjusted against each other until the requisite clearance or preload is obtained (→ *Bearing preload*, **page 214**).

When universally matchable bearings are mounted immediately adjacent to each other, there is no need for adjustment. The requisite clearance or preload is obtained by choosing bearings from an appropriate clearance or preload class and by applying suitable fits for the bearings on the shaft and in the housing.

The performance and operational reliability of single bearings depend on proper adjustment while universally matchable bearings depend on the correct selection of clearance or preload. If there is too much clearance in the bearing arrangement during operation, the load carrying capacity of the bearings is not fully utilized. Excessive preload produces more friction and higher operating temperatures, leading to a reduction in bearing service life.

Axial loads in one direction

Back-to-back and face-to-face arrangements require special attention when the axial load acts predominantly in one direction. This creates unfavourable rolling conditions for the balls of the axially unloaded bearing and can lead to increased noise levels, discontinuity in the lubricant film and increased stresses on the cage. When the axial load acts predominantly in one direction, SKF recommends zero operating clearance, which can be attained by using springs.

Load ratio

Because of the 40° contact angle, favourable rolling conditions for bearings in the 70 B, 72 B(E) and 73 B(E) series require a load ratio of $F_a/F_r \geq 1$. A load ratio of $F_a/F_r < 1$ can reduce bearing service life.

Fig. 11

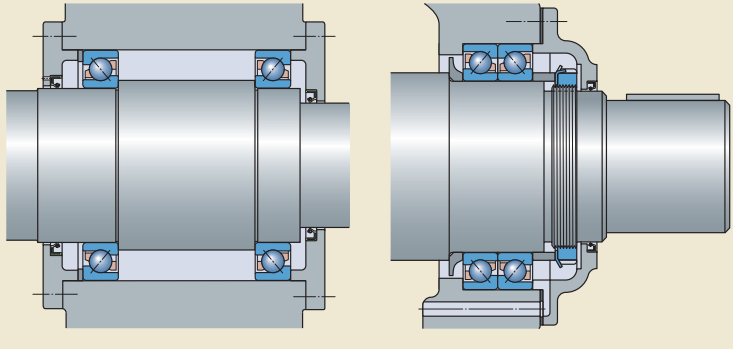

Single bearings, face-to-face

Bearing set, back-to-back

Four-point contact ball bearings

Used as a thrust bearing

Four-point contact ball bearings are often used as pure thrust bearings, together with a radial bearing (→ **fig. 12**). When used in this way, the bearing should be mounted with radial clearance in the housing.

When a four-point contact ball bearing is used together with a cylindrical roller bearing, the radial internal clearance of the cylindrical roller bearing should be smaller than the theoretical radial internal clearance of the four-point contact ball bearing after both have been mounted. The theoretical radial clearance can be calculated from

$$C_r = 0{,}7\ C_a$$

where
C_r = theoretical radial internal clearance
C_a = axial internal clearance (→ **table 8**, **page 490**)

The outer ring of the four-point contact ball bearing must be able to accommodate thermal movements. Therefore, it should not be clamped axially, but a small gap should be maintained between the outer ring and the cover flange. To prevent the outer ring from turning, bearings with locating slots should be used (→ **fig. 12**). If clamping the outer ring cannot be avoided, the outer ring must be carefully centred during mounting.

Vertical shafts

When four-point contact ball bearings with a machined brass cage (designation suffix MA) are used on a vertical shaft, the limiting speed listed in the product tables should be reduced to 70% of the value listed in the product tables. As with all vertical shafts, be sure that the bearings are adequately lubricated.

Load ratio

Four-point contact ball bearings do not function properly unless the balls contact only one inner ring raceway and the opposite side of the outer ring raceway. This is the case when the load ratio $F_a/F_r \geq 1{,}27$. A load ratio of $F_a/F_r < 1{,}27$ can reduce bearing service life.

Fig. 12

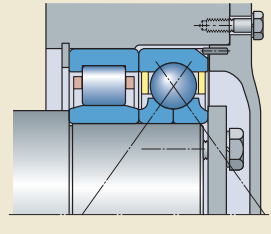

3 Angular contact ball bearings

Matrix 1

SKF single row angular contact ball bearings – standard assortment

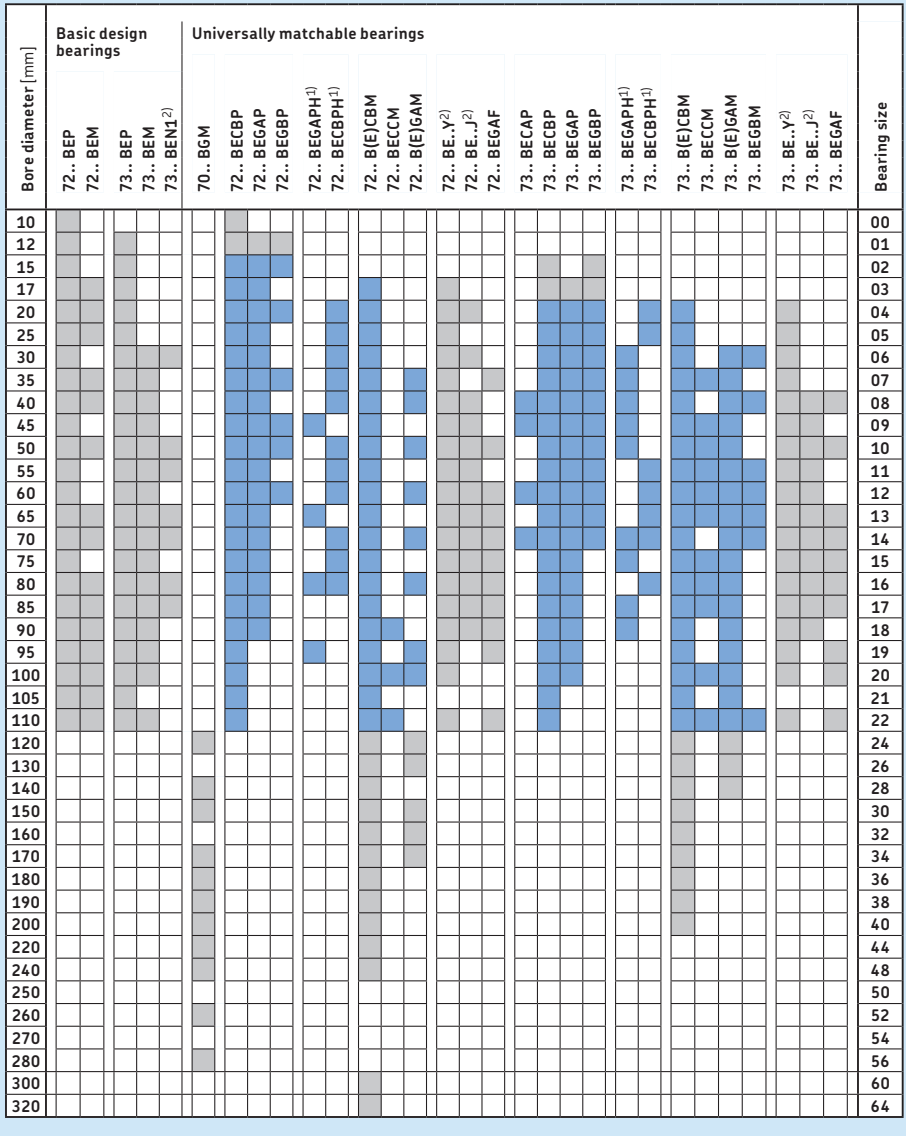

1) For bearings other than those listed, contact SKF.
2) Several variants are possible. Contact SKF prior to ordering.

Matrix 2

SKF double row angular contact ball bearings – standard assortment

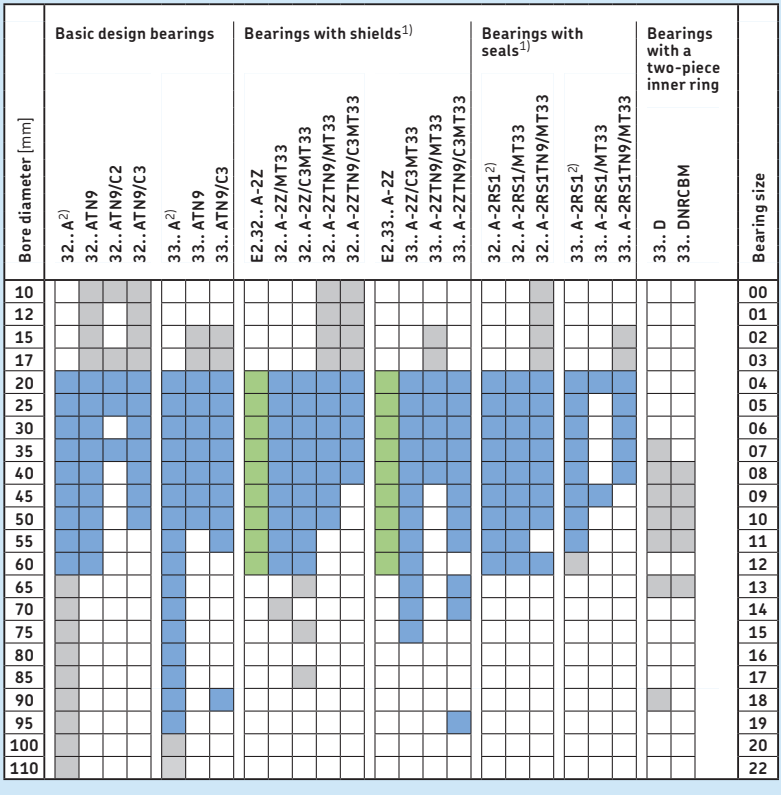

1) The standard grease for double row angular contact ball bearings is GJN. In Europe, MT33 is commonly used and widely available. Other greases listed in **table 2** (→ **page 483**) are available on request.
2) Several variants are possible. Contact SKF prior to ordering.

Matrix 3

SKF four-point contact ball bearings – standard assortment

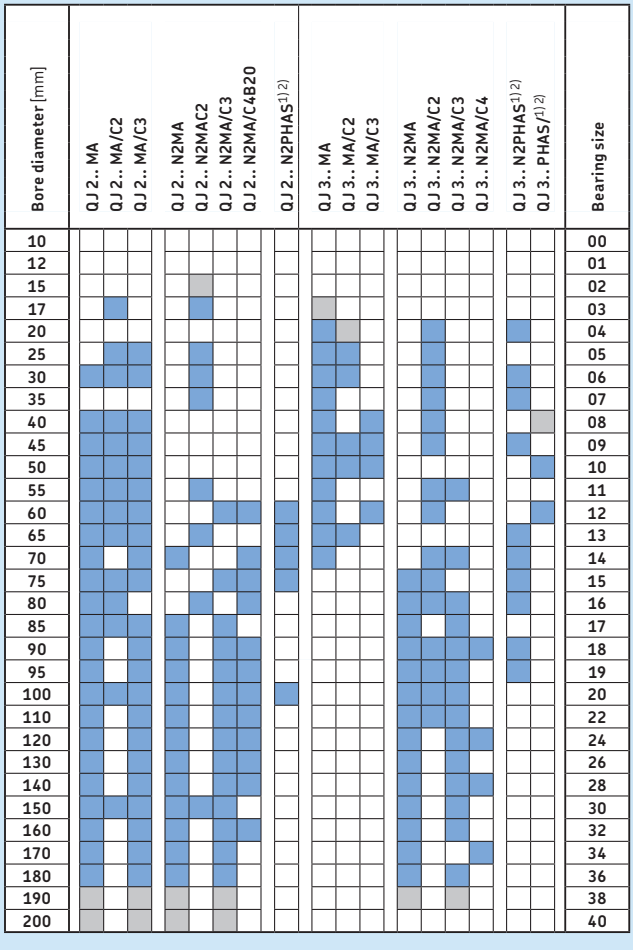

1) For bearings other than those listed, contact SKF.
2) Several variants are possible. Contact SKF prior to ordering.

3

Designation system

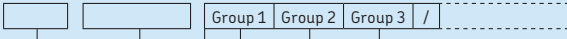

Prefixes

E2. SKF Energy Efficient bearing

Basic designation

Listed in **diagram 2** (→ **page 43**)

Suffixes

Group 1: Internal design

A Single row bearing with a 30° contact angle
A Double row bearing without filling slots
AC Single row bearing with a 25° contact angle
B Single row bearing with a 40° contact angle
D Two-piece inner ring
E Optimized internal design

Group 2: External design (seals, snap ring groove etc.)

N Snap ring groove in the outer ring
NR Snap ring groove in the outer ring, with appropriate snap ring
N1 One locating slot (notch) in one outer ring side face
N2 Two locating slots (notches) in one outer ring side face, 180° apart
-2RS1 Contact seal, NBR, on both sides
-2Z Shield on both sides

Group 3: Cage design

F Machined steel cage, ball centred
FA Machined steel cage, outer ring centred
J Stamped steel cage, ball centred
M Machined brass cage, ball centred; different designs for single row bearings are identified by a number following the M, e.g. M2
MA Machined brass cage, outer ring centred
P Single row bearing with a glass fibre reinforced PA66 cage, ball centred
PH Glass fibre reinforced PEEK cage, ball centred
PHAS Glass fibre reinforced PEEK cage, with lubrication grooves in the guiding surface, outer ring centred
TN9 Glass fibre reinforced PA66 cage, ball centred
Y Stamped brass cage, ball centred

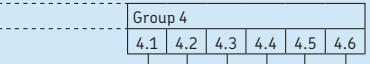

Group 4.6: Other variants

Group 4.5: Lubrication

GWF
MT33
VT113
WT
Grease suffixes (→ **table 2**, **page 483**)

Group 4.4: Stabilization

S1 Bearing rings heat stabilized for operating temperatures ≤ 200 °C *(390 °F)*

Group 4.3: Bearing sets, matched bearings

DB Two bearings matched for mounting back-to-back
DF Two bearings matched for mounting face-to-face
DT Two bearings matched for mounting in tandem

Group 4.2: Accuracy, clearance, preload, quiet running

B20 Reduced width tolerance
P5 Dimensional and running accuracy to P5 tolerance class
P6 Dimensional and running accuracy to P6 tolerance class
P62 P6 + C2
P63 P6 + C3
P64 P6 + C4
CNL Axial internal clearance in the lower half of the Normal range
C2 Axial internal clearance smaller than Normal
C2H Axial internal clearance in the upper half of the C2 range
C2L Axial internal clearance in the lower half of the C2 range
C3 Axial internal clearance greater than Normal
C4 Axial internal clearance greater than C3
CB Double row bearing with controlled axial clearance
CA Bearing for universal matching. Two bearings arranged back-to-back or face-to-face have axial internal clearance smaller than Normal (CB).
CB Bearing for universal matching. Two bearings arranged back-to-back or face-to-face have Normal axial internal clearance.
CC Bearing for universal matching. Two bearings arranged back-to-back or face-to-face have axial internal clearance greater than Normal (CB).
G Bearing for universal matching. Two bearings arranged back-to-back or face-to-face have axial internal clearance.
GA Bearing for universal matching. Two bearings arranged back-to-back or face-to-face have light preload.
GB Bearing for universal matching. Two bearings arranged back-to-back or face-to-face have moderate preload.
GC Bearing for universal matching. Two bearings arranged back-to-back or face-to-face have heavy preload.

Group 4.1: Materials, heat treatment

3.1 Single row angular contact ball bearings
d **10–25** mm

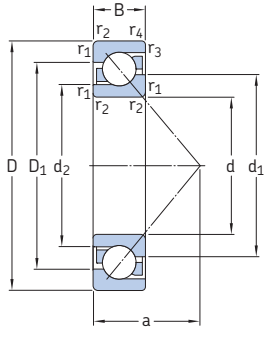

Principal dimensions			Basic load ratings		Fatigue load limit	Speed ratings		Mass	Designations[1]	
			dynamic	static		Reference speed	Limiting speed		Universally matchable bearing	Basic design bearing
d	D	B	C	C_0	P_u					
mm			kN		kN	r/min		kg	–	
10	30	9	7,02	3,35	0,14	30 000	30 000	0,03	**7200 BECBP**	**7200 BEP**
12	32	10	7,61	3,8	0,16	26 000	26 000	0,036	**7201 BECBP**	**7201 BEP**
	37	12	10,6	5	0,208	24 000	24 000	0,06	–	**7301 BEP**
15	35	11	8,8	4,65	0,196	26 000	26 000	0,045	* **7202 BECBP**	–
	35	11	8,32	4,4	0,183	24 000	24 000	0,045	–	**7202 BEP**
	42	13	13	6,7	0,28	20 000	20 000	0,08	**7302 BECBP**	**7302 BEP**
17	40	12	11	5,85	0,25	22 000	22 000	0,065	* **7203 BECBM**	–
	40	12	11	5,85	0,25	22 000	22 000	0,065	* **7203 BECBP**	–
	40	12	10,4	5,5	0,236	20 000	20 000	0,065	–	**7203 BEP**
	40	12	11,1	6,1	0,26	20 000	20 000	0,065	–	**7203 BEY**
	47	14	15,9	8,3	0,355	19 000	19 000	0,11	**7303 BECBP**	**7303 BEP**
20	47	14	14,3	8,15	0,345	19 000	19 000	0,11	* **7204 BECBM**	–
	47	14	14,3	8,15	0,345	19 000	19 000	0,11	* **7204 BECBP**	–
	47	14	14	8,3	0,355	18 000	18 000	0,11	**7204 BECBY**	–
	47	14	13,3	7,65	0,325	18 000	18 000	0,11	–	**7204 BEP**
	47	14	14,3	8,15	0,345	19 000	19 000	0,11	* **7204 BECBPH**	–
	52	15	19	10	0,425	18 000	18 000	0,14	* **7304 BECBPH**	–
	52	15	19	10	0,425	18 000	18 000	0,14	* **7304 BECBM**	–
	52	15	19	10	0,425	18 000	18 000	0,14	* **7304 BECBP**	–
	52	15	19	10,4	0,44	16 000	16 000	0,14	**7304 BECBY**	–
	52	15	17,4	9,5	0,4	16 000	16 000	0,14	–	**7304 BEP**
25	52	15	15,6	10	0,43	17 000	17 000	0,13	* **7205 BECBPH**	–
	52	15	15,6	10	0,43	17 000	17 000	0,13	* **7205 BECBM**	–
	52	15	15,6	10	0,43	17 000	17 000	0,13	* **7205 BECBP**	–
	52	15	15,6	10,2	0,43	15 000	15 000	0,13	**7205 BECBY**	**7205 BEY**
	52	15	14,8	9,3	0,4	15 000	15 000	0,13	–	**7205 BEP**
	62	17	26,5	15,3	0,655	15 000	15 000	0,23	* **7305 BECBPH**	–
	62	17	26,5	15,3	0,655	15 000	15 000	0,23	* **7305 BECBM**	–
	62	17	26,5	15,3	0,655	15 000	15 000	0,23	* **7305 BECBP**	–
	62	17	26	15,6	0,655	14 000	14 000	0,23	**7305 BECBY**	**7305 BEY**
	62	17	24,2	14	0,6	14 000	14 000	0,23	–	**7305 BEP**

[1] For available final variants → **matrix 1, page 500**
* SKF Explorer bearing

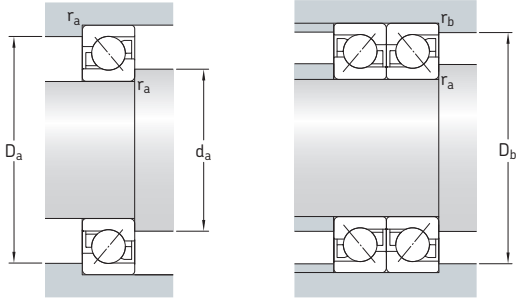

Dimensions							Abutment and fillet dimensions				
d	d_1 ~	d_2 ~	D_1 ~	$r_{1,2}$ min.	$r_{3,4}$ min.	a	d_a min.	D_a max.	D_b max.	r_a max.	r_b max.
mm							mm				
10	18,3	14,6	22,9	0,6	0,3	13	14,2	25,8	27,6	0,6	0,3
12	20,2	16,6	25	0,6	0,3	14	16,2	27,8	30	0,6	0,3
	21,8	17	28,3	1	0,6	16,3	17,6	31,4	32,8	1	0,6
15	22,7	19	27,8	0,6	0,3	16	19,2	30,8	32,6	0,6	0,3
	22,7	19	27,8	0,6	0,3	16	19,2	30,8	32,6	0,6	0,3
	26	20,7	32,6	1	0,6	18,6	20,6	36	38	1	0,6
17	26,3	21,7	31,2	0,6	0,6	18	21,2	35,8	35,8	0,6	0,6
	26,3	21,7	31,2	0,6	0,6	18	21,2	35,8	35,8	0,6	0,6
	26,3	21,7	31,2	0,6	0,6	18	21,2	35,8	35,8	0,6	0,6
	26,3	21,7	31,2	0,6	0,6	18	21,2	35,8	35,8	0,6	0,6
	28,7	22,8	36,2	1	0,6	20,4	22,6	41,4	42,8	1	0,6
20	30,8	25,9	36,5	1	0,6	21	25,6	41,4	42,8	1	0,6
	30,8	25,9	36,5	1	0,6	21	25,6	41,4	42,8	1	0,6
	30,8	25,9	36,5	1	0,6	21	25,6	41,4	42,8	1	0,6
	30,8	25,9	36,5	1	0,6	21	25,6	41,4	42,8	1	0,6
	30,8	25,9	36,5	1	0,6	21	25,6	41,4	42,8	1	0,6
	33,3	33,3	40,4	1,1	0,6	22,8	27	45	47,8	1	0,6
	33,3	33,3	40,4	1,1	0,6	22,8	27	45	47,8	1	0,6
	33,3	33,3	40,4	1,1	0,6	22,8	27	45	47,8	1	0,6
	33,3	33,3	40,4	1,1	0,6	22,8	27	45	47,8	1	0,6
	33,3	33,3	40,4	1,1	0,6	22,8	27	45	47,8	1	0,6
25	36,1	30,9	41,5	1	0,6	24	30,6	46,4	47,8	1	0,6
	36,1	30,9	41,5	1	0,6	24	30,6	46,4	47,8	1	0,6
	36,1	30,9	41,5	1	0,6	24	30,6	46,4	47,8	1	0,6
	36,1	30,9	41,5	1	0,6	24	30,6	46,4	47,8	1	0,6
	36,1	30,9	41,5	1	0,6	24	30,6	46,4	47,8	1	0,6
	39,8	32,4	48,1	1,1	0,6	26,8	32	55	57,8	1	0,6
	39,8	32,4	48,1	1,1	0,6	26,8	32	55	57,8	1	0,6
	39,8	32,4	48,1	1,1	0,6	26,8	32	55	57,8	1	0,6
	39,8	32,4	48,1	1,1	0,6	26,8	32	55	57,8	1	0,6
	39,8	32,4	48,1	1,1	0,6	26,8	32	55	57,8	1	0,6

3.1 Single row angular contact ball bearings
d **30–40** mm

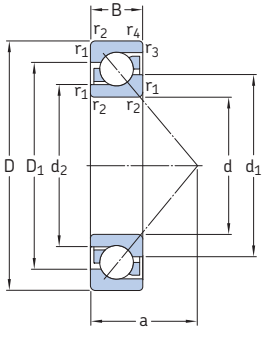

Principal dimensions			Basic load ratings		Fatigue load limit	Speed ratings		Mass	Designations[1]	
			dynamic	static		Reference speed	Limiting speed		Universally matchable bearing	Basic design bearing
d	D	B	C	C_0	P_u					
mm			kN		kN	r/min		kg	–	
30	62	16	24	15,6	0,655	14 000	14 000	0,2	* **7206 BECBM**	–
	62	16	24	15,6	0,655	14 000	14 000	0,2	* **7206 BECBP**	–
	62	16	23,8	15,6	0,655	13 000	13 000	0,2	**7206 BECBY**	–
	62	16	22,5	14,3	0,61	13 000	13 000	0,2	–	**7206 BEP**
	62	16	24	15,6	0,655	14 000	14 000	0,2	* **7206 BECBPH**	–
	72	19	35,5	21,2	0,9	13 000	13 000	0,34	* **7306 BECBM**	–
	72	19	35,5	21,2	0,9	13 000	13 000	0,34	* **7306 BECBP**	–
	72	19	34,5	21,2	0,9	12 000	12 000	0,34	**7306 BECBY**	–
	72	19	32,5	19,3	0,815	12 000	12 000	0,34	–	**7306 BEP**
	72	19	35,5	21,2	0,9	13 000	13 000	0,34	* **7306 BEGAPH**	–
35	72	17	31	20,8	0,88	12 000	12 000	0,28	* **7207 BECBPH**	–
	72	17	31	20,8	0,88	12 000	12 000	0,28	* **7207 BECBM**	–
	72	17	31	20,8	0,88	12 000	12 000	0,28	* **7207 BECBP**	–
	72	17	29,1	19	0,815	11 000	11 000	0,28	**7207 BECBY**	**7207 BEP**
	80	21	41,5	26,5	1,14	11 000	11 000	0,45	* **7307 BECBM**	–
	80	21	41,5	26,5	1,14	11 000	11 000	0,45	* **7307 BECBP**	–
	80	21	39	24,5	1,04	10 000	10 000	0,45	**7307 BECBY**	**7307 BEP**
	80	21	41,5	26,5	1,14	11 000	11 000	0,45	* **7307 BEGAPH**	–
40	80	18	36,5	26	1,1	11 000	11 000	0,37	* **7208 BECBPH**	–
	80	18	36,5	26	1,1	11 000	11 000	0,37	* **7208 BECBM**	–
	80	18	36,5	26	1,1	11 000	11 000	0,37	* **7208 BECBP**	–
	80	18	36,4	26	1,1	10 000	10 000	0,37	**7208 BECBY**	–
	80	18	37,7	26	1,1	11 000	11 000	0,37	–	**7208 BEP**
	90	23	50	32,5	1,37	10 000	10 000	0,68	* **7308 BECBM**	–
	90	23	50	32,5	1,37	10 000	10 000	0,62	* **7308 BECBP**	–
	90	23	49,4	33,5	1,4	9 000	9 000	0,64	**7308 BECBY**	–
	90	23	46,2	30,5	1,29	9 000	9 000	0,62	–	**7308 BEP**
	90	23	50	32,5	1,37	10 000	10 000	0,62	* **7308 BEGAPH**	–

[1] For available final variants → **matrix 1, page 500**
* SKF Explorer bearing

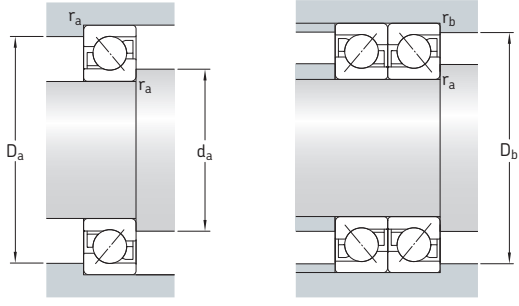

Dimensions							Abutment and fillet dimensions				
d	d_1 ~	d_2 ~	D_1 ~	$r_{1,2}$ min.	$r_{3,4}$ min.	a	d_a min.	D_a max.	D_b max.	r_a max.	r_b max.
mm							mm				
30	42,7	36,1	50,1	1	0,6	27,3	35,6	56,4	57,8	1	0,6
	42,7	36,1	50,1	1	0,6	27,3	35,6	56,4	57,8	1	0,6
	42,7	36,1	50,1	1	0,6	27,3	35,6	56,4	57,8	1	0,6
	42,7	36,1	50,1	1	0,6	27,3	35,6	56,4	57,8	1	0,6
	42,7	36,1	50,1	1	0,6	27,3	35,6	56,4	57,8	1	0,6
	46,6	37,9	56,5	1,1	0,6	31	37	65	67,8	1	0,6
	46,6	37,9	56,5	1,1	0,6	31	37	65	67,8	1	0,6
	46,6	37,9	56,5	1,1	0,6	31	37	65	67,8	1	0,6
	46,6	37,9	56,5	1,1	0,6	31	37	65	67,8	1	0,6
	46,6	37,9	56,5	1,1	0,6	31	37	65	67,8	1	0,6
35	49,7	42	58,3	1,1	0,6	31	42	65	67,8	1	0,6
	49,7	42	58,3	1,1	0,6	31	42	65	67,8	1	0,6
	49,7	42	58,3	1,1	0,6	31	42	65	67,8	1	0,6
	49,7	42	58,3	1,1	0,6	31	42	65	67,8	1	0,6
	52,8	43,6	63,3	1,5	1	35	44	71	74,4	1,5	1
	52,8	43,6	63,3	1,5	1	35	44	71	74,4	1,5	1
	52,8	43,6	63,3	1,5	1	35	44	71	74,4	1,5	1
	52,8	43,6	63,3	1,5	1	35	44	71	74,4	1,5	1
40	56,3	48,1	65,6	1,1	0,6	34	47	73	75,8	1	0,6
	56,3	48,1	65,6	1,1	0,6	34	47	73	75,8	1	0,6
	56,3	48,1	65,6	1,1	0,6	34	47	73	75,8	1	0,6
	56,3	48,1	65,6	1,1	0,6	34	47	73	75,8	1	0,6
	56,3	48,1	65,6	1,1	0,6	34	47	73	75,8	1	0,6
	59,7	49,6	71,6	1,5	1	39	49	81	84,4	1,5	1
	59,7	49,6	71,6	1,5	1	39	49	81	84,4	1,5	1
	59,7	49,6	71,6	1,5	1	39	49	81	84,4	1,5	1
	59,7	49,6	71,6	1,5	1	39	49	81	84,4	1,5	1
	59,7	49,6	71,6	1,5	1	39	49	81	84,4	1,5	1

3.1 Single row angular contact ball bearings
d **45–55** mm

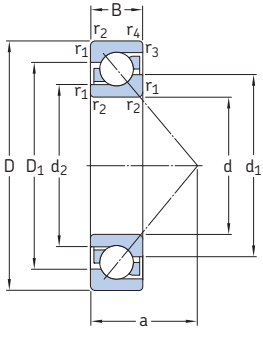

Principal dimensions			Basic load ratings dynamic	static	Fatigue load limit	Speed ratings Reference speed	Limiting speed	Mass	Designations[1] Universally matchable bearing	Basic design bearing
d	D	B	C	C_0	P_u					
mm			kN		kN	r/min		kg	–	
45	85	19	38	28,5	1,22	10 000	10 000	0,42	* **7209 BECBM**	–
	85	19	38	28,5	1,22	10 000	10 000	0,42	* **7209 BECBP**	–
	85	19	37,7	28	1,2	9 000	9 000	0,42	**7209 BECBY**	–
	85	19	35,8	26	1,12	9 000	9 000	0,42	–	**7209 BEP**
	85	19	38	28,5	1,22	10 000	10 000	0,42	* **7209 BEGAPH**	–
	100	25	61	40,5	1,73	9 000	9 000	0,91	* **7309 BECBM**	–
	100	25	61	40,5	1,73	9 000	9 000	0,82	* **7309 BECBP**	–
	100	25	60,5	41,5	1,73	8 000	8 000	0,87	**7309 BECBY**	–
	100	25	55,9	37,5	1,6	8 000	8 000	0,82	–	**7309 BEP**
	100	25	61	40,5	1,73	9 000	9 000	0,82	* **7309 BEGAPH**	–
50	90	20	40	31	1,32	9 000	9 000	0,47	* **7210 BECBPH**	–
	90	20	40	31	1,32	9 000	9 000	0,47	* **7210 BECBM**	–
	90	20	40	31	1,32	9 000	9 000	0,47	* **7210 BECBP**	–
	90	20	37,7	28,5	1,22	8 500	8 500	0,47	**7210 BECBY**	**7210 BEP**
	110	27	75	51	2,16	8 000	8 000	1,1	* **7310 BECBM**	–
	110	27	75	51	2,16	8 000	8 000	1,1	* **7310 BECBP**	–
	110	27	74,1	51	2,2	7 500	7 500	1,15	**7310 BECBY**	–
	110	27	68,9	47,5	2	7 500	7 500	1,1	–	**7310 BEP**
	110	27	75	51	2,16	8 000	8 000	1,1	* **7310 BEGAPH**	–
55	100	21	49	40	1,66	8 000	8 000	0,62	* **7211 BECBPH**	–
	100	21	49	40	1,66	8 000	8 000	0,62	* **7211 BECBM**	–
	100	21	49	40	1,66	8 000	8 000	0,62	* **7211 BECBP**	–
	100	21	48,8	38	1,63	7 500	7 500	0,62	**7211 BECBY**	–
	100	21	46,2	36	1,53	7 500	7 500	0,62	–	**7211 BEP**
	120	29	85	60	2,55	7 000	7 000	1,4	* **7311 BECBM**	–
	120	29	85	60	2,55	7 000	7 000	1,4	* **7311 BECBP**	–
	120	29	85,2	60	2,55	6 700	6 700	1,4	**7311 BECBY**	–
	120	29	79,3	55	2,32	6 700	6 700	1,4	–	**7311 BEP**
	120	29	85	60	2,55	7 000	7 000	1,4	* **7311 BECBPH**	–

[1] For available final variants → **matrix 1, page 500**
* SKF Explorer bearing

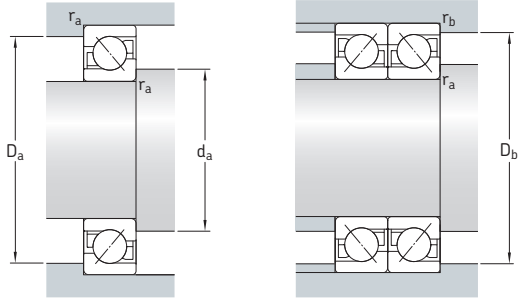

Dimensions							Abutment and fillet dimensions				
d	d_1 ~	d_2 ~	D_1 ~	$r_{1,2}$ min.	$r_{3,4}$ min.	a	d_a min.	D_a max.	D_b max.	r_a max.	r_b max.
mm							mm				
45	60,9	52,7	70,2	1,1	0,6	37	52	78	80,8	1	0,6
	60,9	52,7	70,2	1,1	0,6	37	52	78	80,8	1	0,6
	60,9	52,7	70,2	1,1	0,6	37	52	78	80,8	1	0,6
	60,9	52,7	70,2	1,1	0,6	37	52	78	80,8	1	0,6
	60,9	52,7	70,2	1,1	0,6	37	52	78	80,8	1	0,6
	66,5	55,3	79,8	1,5	1	43	54	91	94,4	1,5	1
	66,5	55,3	79,8	1,5	1	43	54	91	94,4	1,5	1
	66,5	55,3	79,8	1,5	1	43	54	91	94,4	1,5	1
	66,5	55,3	79,8	1,5	1	43	54	91	94,4	1,5	1
	66,5	55,3	79,8	1,5	1	43	54	91	94,4	1,5	1
50	65,8	57,7	75,2	1,1	0,6	39	57	83	85,8	1	0,6
	65,8	57,7	75,2	1,1	0,6	39	57	83	85,8	1	0,6
	65,8	57,7	75,2	1,1	0,6	39	57	83	85,8	1	0,6
	65,8	57,7	75,2	1,1	0,6	39	57	83	85,8	1	0,6
	73,8	61,1	88,8	2	1	47	61	99	104	2	1
	73,8	61,1	88,8	2	1	47	61	99	104	2	1
	73,8	61,1	88,8	2	1	47	61	99	104	2	1
	73,8	61,1	88,8	2	1	47	61	99	104	2	1
	73,8	61,1	88,8	2	1	47	61	99	104	2	1
55	72,7	63,6	83,3	1,5	1	43	64	91	94	1,5	1
	72,7	63,6	83,3	1,5	1	43	64	91	94	1,5	1
	72,7	63,6	83,3	1,5	1	43	64	91	94	1,5	1
	72,7	63,6	83,3	1,5	1	43	64	91	94	1,5	1
	72,7	63,6	83,3	1,5	1	43	64	91	94	1,5	1
	80,3	66,7	96,6	2	1	51	66	109	114	2	1
	80,3	66,7	96,6	2	1	51	66	109	114	2	1
	80,3	66,7	96,6	2	1	51	66	109	114	2	1
	80,3	66,7	96,6	2	1	51	66	109	114	2	1
	80,3	66,7	96,6	2	1	51	66	109	114	2	1

3.1 Single row angular contact ball bearings
d **60–70** mm

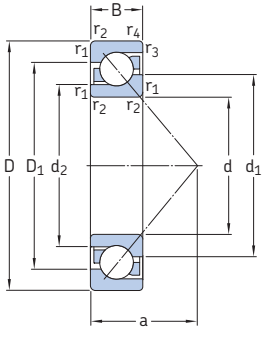

Principal dimensions			Basic load ratings dynamic	static	Fatigue load limit	Speed ratings Reference speed	Limiting speed	Mass	Designations[1] Universally matchable bearing	Basic design bearing
d	D	B	C	C_0	P_u					
mm			kN		kN	r/min		kg	–	
60	110	22	61	50	2,12	7 500	7 500	0,8	* **7212 BECBPH**	–
	110	22	61	50	2,12	7 500	7 500	0,8	* **7212 BECBM**	–
	110	22	61	50	2,12	7 500	7 500	0,8	* **7212 BECBP**	–
	110	22	57,2	45,5	1,93	7 000	7 000	0,8	**7212 BECBY**	
	110	22	57,2	45,5	1,93	7 000	7 000	0,8	–	**7212 BEP**
	130	31	104	76,5	3,2	6 700	6 700	1,75	* **7312 BECBM**	–
	130	31	104	76,5	3,2	6 700	6 700	1,75	* **7312 BECBP**	–
	130	31	104	76,5	3,2	6 700	6 700	1,75	* **7312 BECBPH**	–
	130	31	95,6	69,5	3	6 000	6 000	1,75	**7312 BECBY**	**7312 BEP**
65	120	23	69,5	57	2,45	6 700	6 700	1	* **7213 BECBM**	–
	120	23	69,5	57	2,45	6 700	6 700	1	* **7213 BECBP**	–
	120	23	66,3	54	2,28	6 300	6 300	1	–	**7213 BEP**
	120	23	66,3	54	2,28	6 300	6 300	1	**7213 BECBY**	**7213 BEY**
	120	23	69,5	57	2,45	6 700	6 700	1	* **7213 BEGAPH**	–
	140	33	116	86,5	3,65	6 300	6 300	2,15	* **7313 BECBM**	–
	140	33	116	86,5	3,65	6 300	6 300	2,15	* **7313 BECBP**	–
	140	33	108	80	3,35	5 600	5 600	2,15	**7313 BECBY**	**7313 BEP**
	140	33	116	86,5	3,65	6 300	6 300	2,15	* **7313 BECBPH**	–
70	125	24	72	60	2,55	6 300	6 300	1,1	* **7214 BECBM**	–
	125	24	75	64	2,7	6 300	6 300	1,1	* **7214 BECBP**	–
	125	24	71,5	60	2,5	6 000	6 000	1,1	**7214 BECBY**	**7214 BEP**
	125	24	75	64	2,7	6 300	6 300	1,1	* **7214 BECBPH**	–
	150	35	127	98	3,9	5 600	5 600	2,65	* **7314 BECBM**	–
	150	35	127	98	3,9	5 600	5 600	2,65	* **7314 BECBP**	–
	150	35	127	98	3,9	5 600	5 600	2,65	* **7314 BECBPH**	–
	150	35	119	90	3,65	5 300	5 300	2,65	**7314 BECBY**	**7314 BEP**
	150	35	127	98	3,9	5 600	5 600	2,65	* **7314 BEGAPH**	–

[1] For available final variants → **matrix 1, page 500**
* SKF Explorer bearing

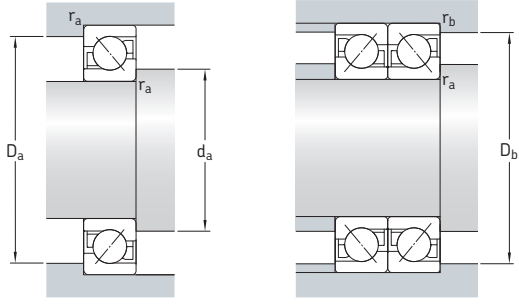

Dimensions							Abutment and fillet dimensions				
d	d_1 ~	d_2 ~	D_1 ~	$r_{1,2}$ min.	$r_{3,4}$ min.	a	d_a min.	D_a max.	D_b max.	r_a max.	r_b max.
mm							mm				
60	79,6	69,3	91,6	1,5	1	47	69	101	104	1,5	1
	79,6	69,3	91,6	1,5	1	47	69	101	104	1,5	1
	79,6	69,3	91,6	1,5	1	47	69	101	104	1,5	1
	79,6	69,3	91,6	1,5	1	47	69	101	104	1,5	1
	79,6	69,3	91,6	1,5	1	47	69	101	104	1,5	1
	87,3	72,6	105	2,1	1,1	55	72	118	123	2	1
	87,3	72,6	105	2,1	1,1	55	72	118	123	2	1
	87,3	72,6	105	2,1	1,1	55	72	118	123	2	1
	87,3	72,6	105	2,1	1,1	55	72	118	123	2	1
65	86,4	75,5	100	1,5	1	50	74	111	114	1,5	1
	86,4	75,5	100	1,5	1	50	74	111	114	1,5	1
	86,4	75,5	100	1,5	1	50	74	111	114	1,5	1
	86,4	75,5	100	1,5	1	50	74	111	114	1,5	1
	86,4	75,5	100	1,5	1	50	74	111	114	1,5	1
	94,2	78,5	113	2,1	1,1	60	77	128	133	2	1
	94,2	78,5	113	2,1	1,1	60	77	128	133	2	1
	94,2	78,5	113	2,1	1,1	60	77	128	133	2	1
	94,2	78,5	113	2,1	1,1	60	77	128	133	2	1
70	91,5	80,3	105	1,5	1	53	79	116	119	1,5	1
	91,5	80,3	105	1,5	1	53	79	116	119	1,5	1
	91,5	80,3	105	1,5	1	53	79	116	119	1,5	1
	91,5	80,3	105	1,5	1	53	79	116	119	1,5	1
	101	84,4	121	2,1	1,1	64	82	138	143	2	1
	101	84,4	121	2,1	1,1	64	82	138	143	2	1
	101	84,4	121	2,1	1,1	64	82	138	143	2	1
	101	84,4	121	2,1	1,1	64	82	138	143	2	1
	101	84,4	121	2,1	1,1	64	82	138	143	2	1

3.1 Single row angular contact ball bearings
d **75–85** mm

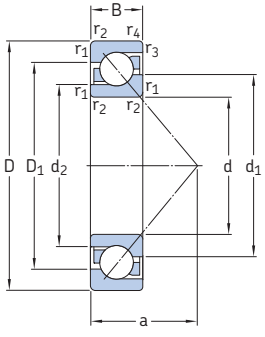

Principal dimensions			Basic load ratings		Fatigue load limit	Speed ratings		Mass	Designations[1]	
			dynamic	static		Reference speed	Limiting speed		Universally matchable bearing	Basic design bearing
d	D	B	C	C_0	P_u					
mm			kN		kN	r/min		kg	–	
75	130	25	73,5	65,5	2,7	6 300	6 300	1,2	* **7215 BECBPH**	–
	130	25	73,5	65,5	2,7	6 300	6 300	1,2	* **7215 BECBM**	–
	130	25	73,5	65,5	2,7	6 300	6 300	1,2	* **7215 BECBP**	–
	130	25	72,8	64	2,65	5 600	5 600	1,2	**7215 BECBY**	–
	130	25	70,2	60	2,5	5 600	5 600	1,2	–	**7215 BEP**
	160	37	132	104	4,15	5 300	5 300	3,2	* **7315 BECBM**	–
	160	37	132	104	4,15	5 300	5 300	3,2	* **7315 BECBP**	–
	160	37	133	106	4,15	5 000	5 000	3,2	**7315 BECBY**	–
	160	37	125	98	3,8	5 000	5 000	3,2	–	**7315 BEP**
	160	37	132	104	4,15	5 300	5 300	3,2	* **7315 BEGAPH**	–
80	140	26	85	75	3,05	5 600	5 600	1,45	* **7216 BECBPH**	–
	140	26	85	75	3,05	5 600	5 600	1,45	* **7216 BECBM**	–
	140	26	85	75	3,05	5 600	5 600	1,45	* **7216 BECBP**	–
	140	26	83,2	73,5	3	5 300	5 300	1,45	**7216 BECBY**	–
	140	26	80,6	69,5	2,8	5 300	5 300	1,45	–	**7216 BEP**
	140	26	85	75	3,05	5 600	5 600	1,45	* **7216 BEGAPH**	–
	170	39	143	118	4,5	5 000	5 000	3,8	* **7316 BECBPH**	–
	170	39	143	118	4,5	5 000	5 000	3,8	* **7316 BECBM**	–
	170	39	143	118	4,5	5 000	5 000	3,8	* **7316 BECBP**	–
	170	39	143	118	4,5	4 500	4 500	3,8	**7316 BECBY**	–
	170	39	135	110	4,15	4 500	4 800	3,8	–	**7316 BEM**
	170	39	135	110	4,15	4 500	4 500	3,8	–	**7316 BEP**
85	150	28	102	90	3,55	5 300	5 300	1,85	* **7217 BECBM**	–
	150	28	102	90	3,55	5 300	5 300	1,85	* **7217 BECBP**	–
	150	28	95,6	83	3,25	5 000	5 000	1,85	**7217 BECBY**	**7217 BEP**
	180	41	156	132	4,9	4 800	4 800	4,45	* **7317 BECBM**	–
	180	41	156	132	4,9	4 800	4 800	4,45	* **7317 BECBP**	–
	180	41	153	132	4,9	4 300	4 300	4,45	**7317 BECBY**	–
	180	41	146	122	4,5	4 300	4 500	4,45	–	**7317 BEM**
	180	41	146	122	4,5	4 300	4 300	4,45	–	**7317 BEP**
	180	41	156	132	4,9	4 800	4 800	4,45	* **7317 BEGAPH**	–

[1] For available final variants → **matrix 1, page 500**
* SKF Explorer bearing

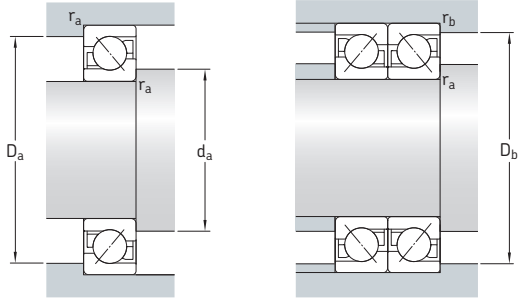

Dimensions							Abutment and fillet dimensions				
d	d_1 ~	d_2 ~	D_1 ~	$r_{1,2}$ min.	$r_{3,4}$ min.	a	d_a min.	D_a max.	D_b max.	r_a max.	r_b max.
mm							mm				
75	96,3	85,3	111	1,5	1	56	84	121	124	1,5	1
	96,3	85,3	111	1,5	1	56	84	121	124	1,5	1
	96,3	85,3	111	1,5	1	56	84	121	124	1,5	1
	96,3	85,3	111	1,5	1	56	84	121	124	1,5	1
	96,3	85,3	111	1,5	1	56	84	121	124	1,5	1
	108	91,1	129	2,1	1,1	68	87	148	153	2	1
	108	91,1	129	2,1	1,1	68	87	148	153	2	1
	108	91,1	129	2,1	1,1	68	87	148	153	2	1
	108	91,1	129	2,1	1,1	68	87	148	153	2	1
	108	91,1	129	2,1	1,1	68	87	148	153	2	1
80	103	91,4	118	2	1	59	91	130	134	2	1
	103	91,4	118	2	1	59	91	130	134	2	1
	103	91,4	118	2	1	59	91	130	134	2	1
	103	91,4	118	2	1	59	91	130	134	2	1
	103	91,4	118	2	1	59	91	130	134	2	1
	103	91,4	118	2	1	59	91	130	134	2	1
	115	97,1	137	2,1	1,1	72	92	158	163	2	1
	115	97,1	137	2,1	1,1	72	92	158	163	2	1
	115	97,1	137	2,1	1,1	72	92	158	163	2	1
	115	97,1	137	2,1	1,1	72	92	158	163	2	1
	115	97,1	137	2,1	1,1	72	92	158	163	2	1
	115	97,1	137	2,1	1,1	72	92	158	163	2	1
85	110	97	127	2	1	63	96	139	144	2	1
	110	97	127	2	1	63	96	139	144	2	1
	110	97	127	2	1	63	96	139	144	2	1
	122	103	145	3	1,1	76	99	166	173	2,5	1
	122	103	145	3	1,1	76	99	166	173	2,5	1
	122	103	145	3	1,1	76	99	166	173	2,5	1
	122	103	145	3	1,1	76	99	166	173	2,5	1
	122	103	145	3	1,1	76	99	166	173	2,5	1
	122	103	145	3	1,1	76	99	166	173	2,5	1

3.1 Single row angular contact ball bearings
d **90–105** mm

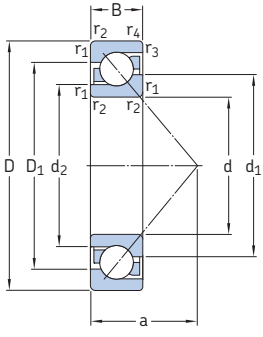

Principal dimensions			Basic load ratings dynamic	static	Fatigue load limit	Speed ratings Reference speed	Limiting speed	Mass	Designations[1] Universally matchable bearing	Basic design bearing
d	D	B	C	C_0	P_u					
mm			kN		kN	r/min		kg	–	
90	160	30	116	104	4	5 000	5 000	2,3	* **7218 BECBM**	–
	160	30	116	104	4	5 000	5 000	2,3	* **7218 BECBP**	–
	160	30	108	96,5	3,65	4 500	4 500	2,3	**7218 BECBY**	**7218 BEP**
	190	43	166	146	5,3	4 500	4 500	5,2	* **7318 BEGAPH**	–
	190	43	166	146	5,3	4 500	4 500	5,2	* **7318 BECBM**	–
	190	43	166	146	5,3	4 500	4 500	5,2	* **7318 BECBP**	–
	190	43	165	146	5,2	4 000	4 000	5,2	**7318 BECBY**	–
	190	43	156	134	4,8	4 000	4 300	5,2	–	**7318 BEM**
	190	43	156	134	4,8	4 000	4 000	5,2	–	**7318 BEP**
95	170	32	124	108	4	4 300	4 500	2,7	**7219 BECBM**	–
	170	32	129	118	4,4	4 800	4 800	2,7	* **7219 BECBP**	–
	170	32	124	108	4	4 300	4 300	2,7	**7219 BECBY**	**7219 BEP**
	170	32	129	118	4,4	4 800	4 800	2,7	* **7219 BEGAPH**	–
	200	45	180	163	5,7	4 300	4 300	6,05	* **7319 BECBM**	–
	200	45	180	163	5,7	4 300	4 300	6,05	* **7319 BECBP**	–
	200	45	190	176	6,1	4 300	4 300	6,05	**7319 BECBY**	–
	200	45	168	150	5,2	3 800	4 000	6,05	–	**7319 BEM**
	200	45	168	150	5,2	3 800	3 800	6,05	–	**7319 BEP**
100	180	34	143	134	4,75	4 500	4 500	3,3	* **7220 BECBM**	–
	180	34	143	134	4,75	4 500	4 500	3,3	* **7220 BECBP**	–
	180	34	135	122	4,4	4 000	4 000	3,3	**7220 BECBY**	**7220 BEP**
	215	47	216	208	6,95	4 000	4 000	7,5	* **7320 BECBM**	–
	215	47	216	208	6,95	4 000	4 000	7,5	* **7320 BECBP**	–
	215	47	203	190	6,4	3 600	3 600	7,5	**7320 BECBY**	**7320 BEP**
	215	47	203	190	6,4	3 600	3 600	7,5	–	**7320 BEM**
105	190	36	148	137	4,8	3 800	4 000	3,95	* **7221 BECBM**	–
	190	36	156	150	5,2	4 300	4 300	3,95	* **7221 BECBP**	–
	225	49	216	208	6,95	3 800	3 800	8,55	* **7321 BECBM**	–
	225	49	216	208	6,95	3 800	3 800	8,55	* **7321 BECBP**	–
	225	49	203	193	6,4	3 400	3 400	8,55	–	**7321 BEP**

[1] For available final variants → **matrix 1, page 500**
* SKF Explorer bearing

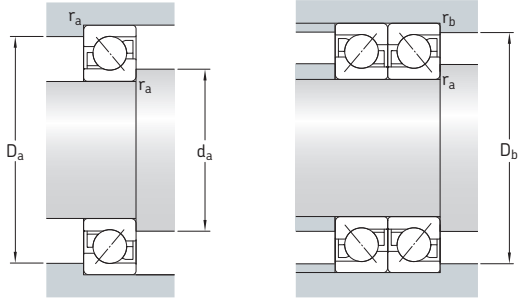

Dimensions							Abutment and fillet dimensions				
d	d_1 ~	d_2 ~	D_1 ~	$r_{1,2}$ min.	$r_{3,4}$ min.	a	d_a min.	D_a max.	D_b max.	r_a max.	r_b max.
mm							mm				
90	117	103	135	2	1	67	101	149	154	2	1
	117	103	135	2	1	67	101	149	154	2	1
	117	103	135	2	1	67	101	149	154	2	1
	129	109	154	3	1,1	80	104	176	183	2,5	1
	129	109	154	3	1,1	80	104	176	183	2,5	1
	129	109	154	3	1,1	80	104	176	183	2,5	1
	129	109	154	3	1,1	80	104	176	183	2,5	1
	129	109	154	3	1,1	80	104	176	183	2,5	1
	129	109	154	3	1,1	80	104	176	183	2,5	1
95	124	109	143	2,1	1,1	72	107	158	163	2	1
	124	109	143	2,1	1,1	72	107	158	163	2	1
	124	109	143	2,1	1,1	72	107	158	163	2	1
	124	109	143	2,1	1,1	72	107	158	163	2	1
	136	114	162	3	1,1	84	109	186	193	2,5	1
	136	114	162	3	1,1	84	109	186	193	2,5	1
	136	114	162	3	1,1	84	109	186	193	2,5	1
	136	114	162	3	1,1	84	109	186	193	2,5	1
	136	114	162	3	1,1	84	109	186	193	2,5	1
100	131	115	151	2,1	1,1	76	112	168	173	2	1
	131	115	151	2,1	1,1	76	112	168	173	2	1
	131	115	151	2,1	1,1	76	112	168	173	2	1
	144	120	174	3	1,1	90	114	201	208	2,5	1
	144	120	174	3	1,1	90	114	201	208	2,5	1
	144	120	174	3	1,1	90	114	201	208	2,5	1
	144	120	174	3	1,1	90	114	201	208	2,5	1
105	138	121	160	2,1	1,1	80	117	178	183	2	1
	138	121	160	2,1	1,1	80	117	178	183	2	1
	151	127	182	3	1,1	94	119	211	218	2,5	1
	151	127	182	3	1,1	94	119	211	218	2,5	1
	151	127	182	3	1,1	94	119	211	218	2,5	1

3.1 Single row angular contact ball bearings
d **110–190** mm

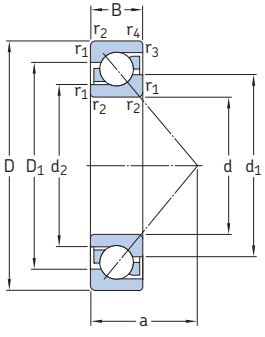

Principal dimensions			Basic load ratings		Fatigue load limit	Speed ratings		Mass	Designations[1]	
			dynamic	static		Reference speed	Limiting speed		Universally matchable bearing	Basic design bearing
d	D	B	C	C_0	P_u					
mm			kN		kN	r/min		kg	–	
110	200	38	163	156	5,3	4 000	4 000	4,6	* **7222 BECBM**	**–**
	200	38	170	166	5,7	4 000	4 000	4,6	* **7222 BECBP**	**–**
	200	38	163	153	5,2	3 600	3 600	4,6	**7222 BECBY**	**7222 BEP**
	240	50	225	224	7,2	3 200	3 400	10	* **7322 BECBM**	**–**
	240	50	225	224	7,2	3 200	3 200	10	* **7322 BECBP**	**–**
	240	50	225	224	7,2	3 200	3 200	10	**7322 BECBY**	**7322 BEY**
	240	50	225	224	7,2	3 200	3 400	10	**–**	**7322 BEM**
120	180	28	87,1	93	3,2	3 800	4 000	2,4	**7024 BGM**	**–**
	215	40	165	163	5,3	3 400	3 600	5,9	**7224 BCBM**	**7224 BM**
	260	55	238	250	7,65	3 000	3 000	14,5	**7324 BCBM**	**–**
130	230	40	186	193	6,1	3 200	3 400	6,95	**7226 BCBM**	**7226 BM**
	280	58	276	305	9	2 800	2 800	17	**7326 BCBM**	**7326 BM**
140	210	33	114	129	4,15	3 200	3 400	3,85	**7028 BGM**	**–**
	250	42	199	212	6,4	3 000	3 000	8,85	**7228 BCBM**	**7228 BM**
	300	62	302	345	9,8	2 600	2 600	21,5	**7328 BCBM**	**–**
150	225	35	133	146	4,55	3 000	3 200	4,7	**7030 BGM**	**–**
	270	45	216	240	6,95	2 600	2 800	11,5	**7230 BCBM**	**–**
	320	65	332	390	10,8	2 400	2 400	26	**7330 BCBM**	**–**
160	290	48	255	300	8,5	2 400	2 600	14	**7232 BCBM**	**–**
170	260	42	172	204	5,85	2 600	2 800	7,65	**7034 BGM**	**–**
	310	52	281	345	9,5	2 400	2 400	17,5	**7234 BCBM**	**–**
	360	72	390	490	12,7	2 000	2 200	36	**7334 BCBM**	**–**
180	280	46	195	240	6,7	2 400	2 600	10	**7036 BGM**	**–**
	320	52	291	375	10	2 200	2 400	18	**7236 BCBM**	**–**
	380	75	410	540	13,7	2 000	2 000	42	**7336 BCBM**	**–**
190	290	46	199	255	6,95	2 400	2 400	10,5	**7038 BGM**	**–**
	340	55	307	405	10,4	2 000	2 200	22	**7238 BCBM**	**–**
	400	78	442	600	14,6	1 900	2 000	48,5	**7338 BCBM**	**–**

[1] For available final variants → **matrix 1, page 500**
* SKF Explorer bearing

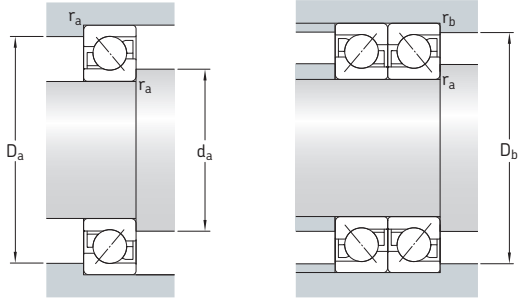

Dimensions							Abutment and fillet dimensions				
d	d_1 ~	d_2 ~	D_1 ~	$r_{1,2}$ min.	$r_{3,4}$ min.	a	d_a min.	D_a max.	D_b max.	r_a max.	r_b max.
mm							mm				
110	144	127	168	2,1	1,1	84	122	188	193	2	1
	144	127	168	2,1	1,1	84	122	188	193	2	1
	144	127	168	2,1	1,1	84	122	188	193	2	1
	160	135	194	3	1,1	99	124	226	233	2,5	1
	160	135	194	3	1,1	99	124	226	233	2,5	1
	160	135	194	3	1,1	99	124	226	233	2,5	1
	160	135	194	3	1,1	99	124	226	233	2,5	1
120	143	132	158	2	1	77	130	170	174	2	1
	157	138	180	2,1	1,1	90	132	203	208	2	1
	178	153	211	3	1,5	107	134	246	253	2,5	1
130	169	149	193	3	1,1	96	144	216	222	2,5	1
	189	161	228	4	1,5	115	147	263	271	3	1,5
140	168	155	183	2	1	90	150	200	204	2	1
	183	163	210	3	1,1	103	154	236	243	2,5	1
	203	172	243	4	1,5	123	158	283	291	3	1,5
150	178	166	197	2,1	1,1	96	162	213	218	2	1
	197	175	226	3	1,1	111	164	256	263	2,5	1
	216	183	259	4	1,5	131	167	303	311	3	1,5
160	211	187	243	3	1,1	118	174	276	283	2,5	1
170	205	188	226	2,1	1,1	111	182	248	253	2	1
	227	202	261	4	1,5	127	187	293	301	3	1,5
	243	207	292	4	2	147	187	343	351	3	2
180	219	201	243	2,1	1,1	119	192	268	273	2	1
	234	209	269	4	1,5	131	197	303	311	3	1,5
	257	219	308	4	2	156	197	363	370	3	2
190	229	210	253	2,1	1,1	124	202	278	283	2	1
	250	224	286	4	1,5	139	207	323	331	3	1,5
	271	231	325	5	2	164	210	380	390	4	2

3.1 Single row angular contact ball bearings
d **200–320** mm

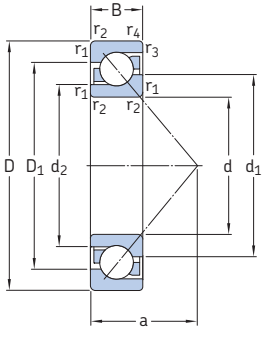

Principal dimensions			Basic load ratings dynamic	static	Fatigue load limit	Speed ratings Reference speed	Limiting speed	Mass	Designation[1] Universally matchable bearing
d	D	B	C	C_0	P_u				
mm			kN		kN	r/min		kg	–
200	310	51	225	290	7,8	2 200	2 200	18	**7040 BGM**
	360	58	325	430	11	2 000	2 000	25	**7240 BCBM**
	420	80	462	655	15,6	1 800	1 800	53	**7340 BCBM**
220	340	56	255	355	9	2 000	2 000	18	**7044 BGM**
	400	65	390	560	13,4	1 800	1 800	37	**7244 BCBM**
240	360	56	260	375	9,15	1 800	1 900	19	**7048 BGM**
	440	72	364	540	12,5	1 600	1 700	49	**7248 BCBM**
260	400	65	332	510	11,8	1 600	1 700	30	**7052 BGM**
280	420	65	338	540	12,2	1 500	1 600	30	**7056 BGM**
300	540	65	553	930	19,3	850	1 300	86,5	**7260 BCBM**
320	580	92	572	1 020	20,4	850	1 200	110	**7264 BCBM**

[1] For available final variants → **matrix 1, page 500**
* SKF Explorer bearing

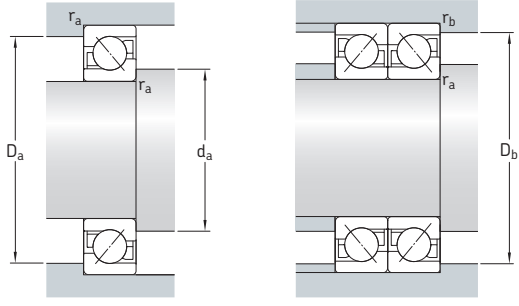

Dimensions							Abutment and fillet dimensions				
d	d_1 ~	d_2 ~	D_1 ~	$r_{1,2}$ min.	$r_{3,4}$ min.	a	d_a min.	D_a max.	D_b max.	r_a max.	r_b max.
mm							mm				
200	243	223	269	2,1	1,1	145	234	285	333	2,1	1,1
	263	235	301	4	1,5	146	217	343	351	3	1,5
	287	247	340	5	2	170	220	400	410	4	2
220	266	246	295	3	1,1	145	234	326	333	2,5	1,1
	291	259	334	4	1,5	164	237	383	391	3	1,5
240	286	265	315	3	1,1	154	254	346	353	2,5	1,1
	322	292	361	4	1,5	180	257	423	431	3	1,5
260	314	288	348	4	1,5	171	276	373	380	3	1,5
280	335	311	367	4	1,5	179	298	402	411	3	1,5
300	395	351	450	5	2,1	219	322	518	528	4	2
320	427	383	487	5	2	236	342	558	568	4	2

3.2 Double row angular contact ball bearings
d **10–50** mm

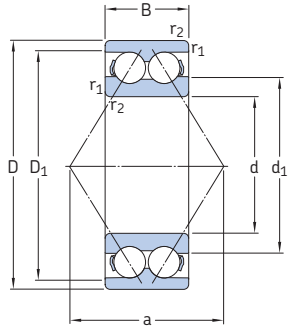

32 A, 33 A

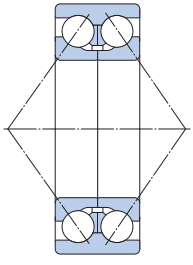

33 D

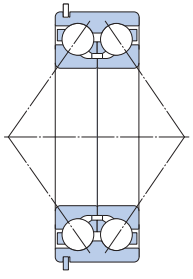

33 DNRCBM[1)]

Principal dimensions			Basic load ratings		Fatigue load limit	Speed ratings		Mass	Designations[2)]	
			dynamic	static		Reference speed	Limiting speed		Bearing with metal cage	polyamide cage
d	D	B	C	C_0	P_u					
mm			kN		kN	r/min		kg	–	
10	30	14	7,61	4,3	0,183	22 000	24 000	0,051	**–**	**3200 ATN9**
12	32	15,9	10,1	5,6	0,24	20 000	22 000	0,058	**–**	**3201 ATN9**
15	35	15,9	11,2	6,8	0,285	17 000	18 000	0,066	**–**	**3202 ATN9**
	42	19	15,1	9,3	0,4	15 000	16 000	0,13	**–**	**3302 ATN9**
17	40	17,5	14,3	8,8	0,365	15 000	16 000	0,096	**–**	**3203 ATN9**
	47	22,2	21,6	12,7	0,54	14 000	14 000	0,18	**–**	**3303 ATN9**
20	47	20,6	20	12	0,51	14 000	14 000	0,16	* **3204 A**	* **3204 ATN9**
	52	22,2	23,6	14,6	0,62	13 000	13 000	0,22	* **3304 A**	* **3304 ATN9**
25	52	20,6	21,6	14,3	0,6	12 000	12 000	0,18	* **3205 A**	* **3205 ATN9**
	62	25,4	32	20,4	0,865	11 000	11 000	0,35	* **3305 A**	* **3305 ATN9**
30	62	23,8	30	20,4	0,865	10 000	10 000	0,29	* **3206 A**	* **3206 ATN9**
	72	30,2	41,5	27,5	1,16	9 000	9 000	0,52	* **3306 A**	* **3306 ATN9**
35	72	27	40	28	1,18	9 000	9 000	0,44	* **3207 A**	* **3207 ATN9**
	80	34,9	52	35,5	1,5	8 500	8 500	0,74	* **3307 A**	* **3307 ATN9**
	80	34,9	52,7	41,5	1,76	7 500	8 000	0,79	**3307 DJ1**	**–**
40	80	30,2	47,5	34	1,43	8 000	8 000	0,57	* **3208 A**	* **3208 ATN9**
	90	36,5	64	44	1,86	7 500	7 500	0,93	* **3308 A**	* **3308 ATN9**
	90	36,5	49,4	41,5	1,76	6 700	7 000	1,2	**3308 DNRCBM**	**–**
	90	36,5	68,9	57	2,45	6 700	7 000	1,05	**3308 DMA**	**3308 DTN9**
45	85	30,2	51	39	1,63	7 500	7 500	0,63	* **3209 A**	* **3209 ATN9**
	100	39,7	75	53	2,24	6 700	6 700	1,25	* **3309 A**	* **3309 ATN9**
	100	39,7	61,8	52	2,2	6 000	6 300	1,5	**3309 DNRCBM**	**–**
	100	39,7	79,3	69,5	3	6 000	6 300	1,65	**3309 DMA**	**–**
50	90	30,2	51	39	1,66	7 000	7 000	0,65	* **3210 A**	* **3210 ATN9**
	110	44,4	90	64	2,75	6 000	6 000	1,7	* **3310 A**	* **3310 ATN9**
	110	44,4	81,9	69,5	3	5 300	5 600	1,95	**3310 DNRCBM**	**–**
	110	44,4	93,6	85	3,6	5 300	5 600	2,2	**3310 DMA**	**–**

[1)] For dimensions of snap ring groove and snap ring → **table 4, page 488**
[2)] For available final variants → **matrix 2, page 501**
* SKF Explorer bearing

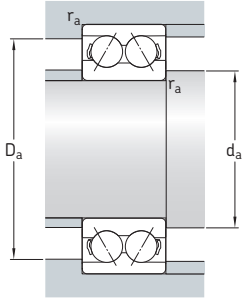

Dimensions					Abutment and fillet dimensions		
d	d_1 ~	D_1 ~	$r_{1,2}$ min.	a	d_a min.	D_a max.	r_a max.
mm					mm		
10	15,8	25	0,6	16	14,4	25,6	0,6
12	17,2	27,7	0,6	19	16,4	27,6	0,6
15	20,2	30,7	0,6	21	19,4	30,6	0,6
	23,7	35,7	1	24	20,6	36,4	1
17	23,3	35	0,6	23	21,4	35,6	0,6
	27,3	38,8	1	28	22,6	41,4	1
20	27,7	40,9	1	28	25,6	41,4	1
	29,9	44	1,1	30	27	45	1
25	32,7	45,9	1	30	31	46	1
	35,7	53,4	1,1	36	32	55	1
30	38,7	55,2	1	36	36	56	1
	39,8	64,1	1,1	42	37	65	1
35	45,4	63,9	1,1	42	42	65	1
	44,6	70,5	1,5	47	44	71	1,5
	52,8	69	1,5	76	44	71	1,5
40	47,8	72,1	1,1	46	47	73	1
	50,8	80,5	1,5	53	49	81	1,5
	60,1	79,5	1,5	71	49	81	1,5
	59,4	80,3	1,5	84	49	81	1,5
45	52,8	77,1	1,1	46	52	78	1
	55,6	90	1,5	58	54	91	1,5
	68	87,1	1,5	79	54	91	1,5
	70	86,4	1,5	93	54	91	1,5
50	57,8	82,1	1,1	52	57	83	1
	62	99,5	2	65	61	99,5	2
	74,6	87	2	102	61	99	2
	76,5	94,2	2	102	61	99	2

3.2 Double row angular contact ball bearings
d **55–110** mm

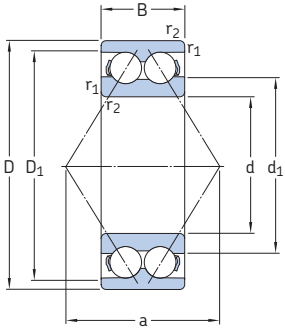

32 A, 33 A

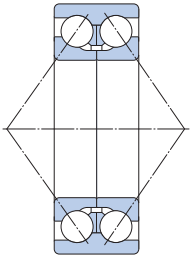

33 D

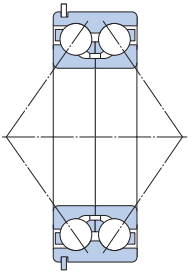

33 DNRCBM[1)]

Principal dimensions			Basic load ratings dynamic	static	Fatigue load limit	Speed ratings Reference speed	Limiting speed	Mass	Designations[2)] Bearing with metal cage	polyamide cage
d	D	B	C	C_0	P_u					
mm			kN		kN	r/min		kg	–	
55	100	33,3	60	47,5	2	6 300	6 300	0,91	* **3211 A**	* **3211 ATN9**
	120	49,2	112	81,5	3,45	5 300	5 300	2,65	* **3311 A**	* **3311 ATN9**
	120	49,2	95,6	83	3,55	5 000	5 300	2,55	**3311 DNRCBM**	–
	120	49,2	111	100	4,3	4 800	5 000	2,8	**3311 DMA**	–
60	110	36,5	73,5	58,5	2,5	5 600	5 600	1,2	* **3212 A**	* **3212 ATN9**
	130	54	127	95	4,05	5 000	5 000	2,8	* **3312 A**	–
65	120	38,1	80,6	73,5	3,1	4 500	4 800	1,75	**3213 A**	–
	140	58,7	146	110	4,55	4 500	4 500	4,1	* **3313 A**	–
	140	58,7	138	122	5,1	4 300	4 500	4	**3313 DNRCBM**	–
70	125	39,7	88,4	80	3,4	4 300	4 500	1,9	**3214 A**	–
	150	63,5	163	125	5	4 300	4 300	5,05	* **3314 A**	–
75	130	41,3	95,6	88	3,75	4 300	4 500	2,1	**3215 A**	–
	160	68,3	176	140	5,5	4 000	4 000	5,55	* **3315 A**	–
80	140	44,4	106	95	3,9	4 000	4 300	2,65	**3216 A**	–
	170	68,3	193	156	6	3 800	3 800	6,8	* **3316 A**	–
85	150	49,2	124	110	4,4	3 600	3 800	3,4	**3217 A**	–
	180	73	208	176	6,55	3 600	3 600	8,3	* **3317 A**	–
90	160	52,4	130	120	4,55	3 400	3 600	4,15	**3218 A**	–
	190	73	208	180	6,4	3 400	3 400	9,25	* **3318 A**	–
95	170	55,6	159	146	5,4	3 200	3 400	5	**3219 A**	–
	200	77,8	240	216	7,5	3 200	3 200	11	* **3319 A**	–
100	180	60,3	178	166	6	3 000	3 200	6,1	**3220 A**	–
	215	82,6	255	255	8,65	2 600	2 800	13,5	**3320 A**	–
110	200	69,8	212	212	7,2	2 800	2 800	8,8	**3222 A**	–
	240	92,1	291	305	9,8	2 400	2 600	19	**3322 A**	–

[1)] For dimensions of snap ring groove and snap ring → **table 4, page 488**
[2)] For available final variants → **matrix 2, page 501**
* SKF Explorer bearing

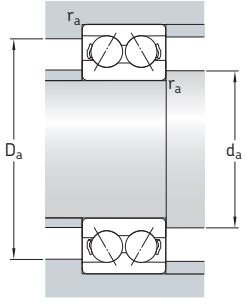

Dimensions					Abutment and fillet dimensions		
d	d_1 ~	D_1 ~	$r_{1,2}$ min.	a	d_a min.	D_a max.	r_a max.
mm					mm		
55	63,2	92,3	1,5	57	63	91	1,5
	68,4	109	2	72	66	109	2
	81,6	107	2	97	66	109	2
	81,3	105	2	114	66	109	2
60	68,8	101	1,5	63	69	101	1,5
	74,3	118	2,1	78	72	118	2
65	85	103	1,5	71	74	111	1,5
	78,5	116	2,1	84	77	128	2
	95,1	126	2,1	114	77	128	2
70	88,5	107	1,5	74	79	116	1,5
	84,2	125	2,1	89	82	138	2
75	91,9	112	1,5	77	84	121	1,5
	88,8	135	2,1	97	87	148	2
80	97,7	120	2	82	91	129	2
	108	143	2,1	101	92	158	2
85	104	128	2	88	96	139	2
	116	153	3	107	99	166	2,5
90	111	139	2	94	101	149	2
	123	160	3	112	104	176	2,5
95	119	147	2,1	101	107	158	2
	127	168	3	127	109	186	2,5
100	125	155	2,1	107	112	168	2
	136	180	3	127	114	201	2,5
110	139	173	2,1	119	122	188	2
	153	200	3	142	124	226	2,5

3.3 Capped double row angular contact ball bearings
d **10–40** mm

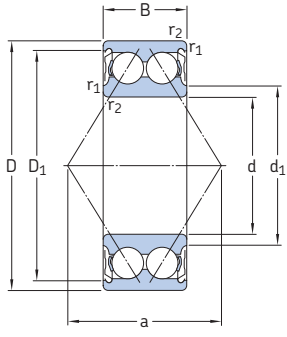

2Z

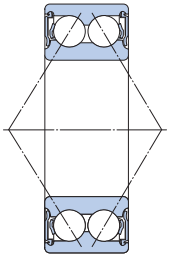

2RS1

Principal dimensions			Basic load ratings dynamic	static	Fatigue load limit	Limiting speed Bearing with shields	seals	Mass	Designations[1] Bearing with shields	seals
d	D	B	C	C_0	P_u					
mm			kN		kN	r/min		kg	–	
10	30	14,3	7,61	4,3	0,183	24 000	17 000	0,051	**3200 A-2Z**	**3200 A-2RS1**
12	32	15,9	10,1	5,6	0,24	22 000	15 000	0,058	**3201 A-2Z**	**3201 A-2RS1**
15	35	15,9	11,2	6,8	0,285	18 000	14 000	0,066	**3202 A-2Z**	**3202 A-2RS1**
	42	19	15,1	9,3	0,4	16 000	12 000	0,13	**3302 A-2Z**	**3302 A-2RS1**
17	40	17,5	14,3	8,8	0,365	16 000	12 000	0,1	**3203 A-2Z**	**3203 A-2RS1**
	47	22,2	21,6	12,7	0,54	14 000	11 000	0,18	**3303 A-2Z**	**3303 A-2RS1**
20	47	20,6	20	12	0,51	14 000	–	0,16	**E2.3204 A-2Z**	**–**
	47	20,6	20	12	0,51	14 000	10 000	0,16	* **3204 A-2Z**	* **3204 A-2RS1**
	52	22,2	23,6	14,6	0,62	13 000	–	0,22	**E2.3304 A-2Z**	**–**
	52	22,2	23,6	14,6	0,62	13 000	9 000	0,22	* **3304 A-2Z**	* **3304 A-2RS1**
25	52	20,6	21,6	14,3	0,6	12 000	–	0,18	**E2.3205 A-2Z**	**–**
	52	20,6	21,6	14,3	0,6	12 000	8 500	0,18	* **3205 A-2Z**	* **3205 A-2RS1**
	62	25,4	32	20,4	0,865	11 000	–	0,35	**E2.3305 A-2Z**	**–**
	62	25,4	32	20,4	0,865	11 000	7 500	0,35	* **3305 A-2Z**	* **3305 A-2RS1**
30	62	23,8	30	20,4	0,865	10 000	–	0,29	**E2.3206 A-2Z**	**–**
	62	23,8	28,6	20,4	0,865	10 000	7 500	0,29	* **3206 A-2Z**	* **3206 A-2RS1**
	72	30,2	41,5	27,5	1,16	9 000	–	0,52	**E2.3306 A-2Z**	**–**
	72	30,2	41,5	27,5	1,16	9 000	6 300	0,52	* **3306 A-2Z**	* **3306 A-2RS1**
35	72	27	40	28	1,18	9 000	–	0,44	**E2.3207 A-2Z**	**–**
	72	27	40	28	1,18	9 000	6 300	0,44	* **3207 A-2Z**	* **3207 A-2RS1**
	80	34,9	52	35,5	1,5	8 500	–	0,74	**E2.3307 A-2Z**	**–**
	80	34,9	52	35,5	1,5	8 500	6 000	0,74	* **3307 A-2Z**	* **3307 A-2RS1**
40	80	30,2	47,5	34	1,43	8 000	–	0,57	**E2.3208 A-2Z**	**–**
	80	30,2	47,5	34	1,43	8 000	5 600	0,57	* **3208 A-2Z**	* **3208 A-2RS1**
	90	36,5	64	44	1,86	7 500	–	0,93	**E2.3308 A-2Z**	**–**
	90	36,5	64	44	1,86	7 500	5 000	0,93	* **3308 A-2Z**	* **3308 A-2RS1**

[1] For available final variants → **matrix 2, page 501**
* SKF Explorer bearing
E2 → **SKF Energy Efficient** bearing

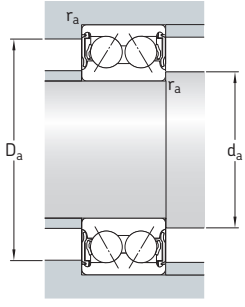

Dimensions					Abutment and fillet dimensions			
d	d_1 ~	D_1 ~	$r_{1,2}$ min.	a	d_a min.	d_a max.	D_a max.	r_a max.
mm					mm			
10	15,8	25	0,6	16	14,4	15,5	25,6	0,6
12	17,2	27,7	0,6	19	16,4	17	27,6	0,6
15	20,2	30,7	0,6	21	19,4	20	30,6	0,6
	23,7	35,7	1	24	20,6	23,5	36,4	1
17	23,3	35	0,6	23	21,4	23	35,6	0,6
	27,3	38,8	1	28	22,6	25,5	41,4	1
20	27,7	40,9	1	28	25,6	27,5	41,4	1
	27,7	40,9	1	28	25,6	27,5	41,4	1
	29,9	44	1,1	30	27	29,5	45	1
	29,9	44	1,1	30	27	29,5	45	1
25	32,7	45,9	1	30	30,6	32,5	46,4	1
	32,7	45,9	1	30	30,6	32,5	46,4	1
	35,7	53,4	1,1	36	32	35,5	55	1
	35,7	53,4	1,1	36	32	35,5	55	1
30	38,7	55,2	1	36	35,6	38,5	56,4	1
	38,7	55,2	1	36	35,6	38,5	56,4	1
	39,8	64,1	1,1	42	37	39,5	65	1
	39,8	64,1	1,1	42	37	39,5	65	1
35	45,4	63,9	1,1	42	42	45	65	1
	45,4	63,9	1,1	42	42	45	65	1
	44,6	70,5	1,5	47	44	44,5	71	1,5
	44,6	70,5	1,5	47	44	44,5	71	1,5
40	47,8	72,1	1,1	46	47	48	73	1
	47,8	72,1	1,1	46	47	48	73	1
	50,8	80,5	1,5	53	49	50,5	81	1,5
	50,8	80,5	1,5	53	49	50,5	81	1,5

3.3 Capped double row angular contact ball bearings
d **45–75** mm

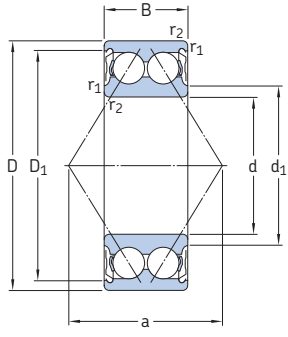

2Z

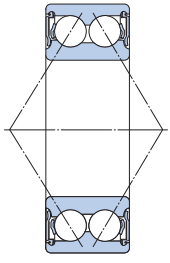

2RS1

Principal dimensions			Basic load ratings		Fatigue load limit	Limiting speed		Mass	Designations[1]	
			dynamic	static		Bearing with			Bearing with	
						shields	seals		shields	seals
d	D	B	C	C_0	P_u					
mm			kN		kN	r/min		kg	–	
45	85	30,2	51	39	1,63	7 500	–	0,63	**E2.3209 A-2Z**	**–**
	85	30,2	51	39	1,63	7 500	5 300	0,63	* **3209 A-2Z**	* **3209 A-2RS1**
	100	39,7	75	53	2,24	6 700	–	1,25	**E2.3309 A-2Z**	**–**
	100	39,7	75	53	2,24	6 700	4 800	1,25	* **3309 A-2Z**	* **3309 A-2RS1**
50	90	30,2	51	39	1,66	7 000	–	0,65	**E2.3210 A-2Z**	**–**
	90	30,2	51	39	1,66	7 000	4 800	0,65	* **3210 A-2Z**	* **3210 A-2RS1**
	110	44,4	90	64	2,75	6 000	–	1,7	**E2.3310 A-2Z**	**–**
	110	44,4	90	64	2,75	6 000	4 300	1,7	* **3310 A-2Z**	* **3310 A-2RS1**
55	100	33,3	60	47,5	2	6 300	–	0,91	**E2.3211 A-2Z**	**–**
	100	33,3	60	47,5	2	6 300	4 500	0,91	* **3211 A-2Z**	* **3211 A-2RS1**
	120	49,2	112	81,5	3,45	5 300	–	2,65	**E2.3311 A-2Z**	**–**
	120	49,2	112	81,5	3,45	5 300	3 800	2,65	* **3311 A-2Z**	* **3311 A-2RS1**
60	110	36,5	73,5	58,5	2,5	5 600	–	1,2	**E2.3212 A-2Z**	**–**
	110	36,5	73,5	58,5	2,5	5 600	4 000	1,2	* **3212 A-2Z**	* **3212 A-2RS1**
	130	54	127	95	4,05	5 000	–	2,8	**E2.3312 A-2Z**	**–**
	130	54	127	95	4,05	5 000	–	2,8	* **3312 A-2Z**	**–**
65	120	38,1	80,6	73,5	3,1	4 800	3 600	1,75	**3213 A-2Z**	**3213 A-2RS1**
	140	58,7	146	110	4,55	4 500	–	4,1	* **3313 A-2Z**	**–**
70	125	39,7	88,4	80	3,4	4 500	–	1,9	**3214 A-2Z**	**–**
	150	63,5	163	125	5	4 300	–	5,05	* **3314 A-2Z**	**–**
75	130	41,3	95,6	88	3,75	4 500	–	2,1	**3215 A-2Z**	**–**
	160	68,3	176	140	5,5	4 000	–	5,6	* **3315 A-2Z**	**–**

[1] For available final variants → **matrix 2**, **page 501**
* SKF Explorer bearing
E2 → **SKF Energy Efficient** bearing

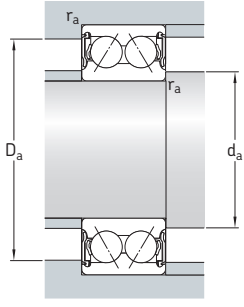

Dimensions					Abutment and fillet dimensions			
d	d_1 ~	D_1 ~	$r_{1,2}$ min.	a	d_a min.	d_a max.	D_a max.	r_a max.
mm					mm			
45	52,8	77,1	1,1	49	52	52,5	78	1
	52,8	77,1	1,1	46	52	52,5	78	1
	55,6	90	1,5	58	54	91	91	1,5
	55,6	90	1,5	58	54	91	91	1,5
50	57,8	82,1	1,1	52	57	57,5	83	1
	57,8	82,1	1,1	52	57	57,5	83	1
	62	99,5	2	65	61	61,5	99,5	2
	62	99,5	2	65	61	61,5	99,5	2
55	63,2	92,3	1,5	57	63	63	91	1,5
	63,2	92,3	1,5	57	63	63	91	1,5
	68,4	109	2	72	66	68	109	2
	68,4	109	2	72	66	68	109	2
60	68,8	101	1,5	63	68,5	68,5	101	1,5
	68,8	101	1,5	63	68,5	68,5	101	1,5
	74,3	118	2,1	78	72	73	118	2
	74,3	118	2,1	78	72	73	118	2
65	85	103	1,5	71	74	76	111	1,5
	78,5	116	2,1	84	77	78,5	128	2
70	88,5	107	1,5	74	79	82	116	1,5
	84,2	125	2,1	89	82	84	138	2
75	91,9	112	1,5	77	84	84	121	1,5
	88,8	135	2,1	97	87	88,5	148	2

3.4 Four-point contact ball bearings
d **15–55** mm

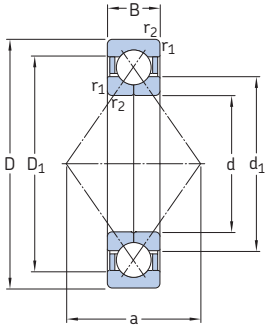

Basic design

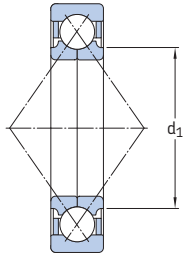

SKF Explorer bearing

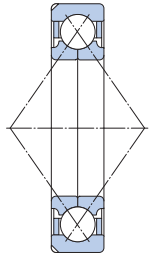

Bearing with locating slots

Principal dimensions			Basic load ratings dynamic	static	Fatigue load limit	Speed ratings Reference speed	Limiting speed	Mass	Designations[1] Bearing with locating slots[2]		without locating slots
d	D	B	C	C_0	P_u						
mm			kN		kN	r/min		kg	–		
15	35	11	12,7	8,3	0,355	22 000	36 000	0,062	**QJ 202 N2MA**		**–**
17	40	12	17	11,4	0,48	22 000	30 000	0,082	* **QJ 203 N2MA**		**–**
	47	14	23,4	15	0,64	17 000	28 000	0,14	**QJ 303 N2MA**		**–**
20	52	15	32	21,6	0,93	18 000	24 000	0,18	* **QJ 304 N2MA**	*	**QJ 304 MA**
	52	15	32	21,6	0,93	20 000	24 000	0,18	* **QJ 304 N2PHAS**		**–**
25	52	15	27	21,2	0,9	16 000	22 000	0,16	* **QJ 205 N2MA**		**–**
	62	17	42,5	30	1,27	15 000	20 000	0,29	* **QJ 305 N2MA**	*	**QJ 305 MA**
30	62	16	37,5	30,5	1,29	14 000	19 000	0,24	* **QJ 206 N2MA**	*	**QJ 206 MA**
	72	19	53	41,5	1,76	12 000	17 000	0,42	* **QJ 306 N2MA**	*	**QJ 306 MA**
	72	19	53	41,5	1,76	14 000	17 000	0,42	* **QJ 306 N2PHAS**		**–**
35	72	17	49	41,5	1,76	12 000	17 000	0,35	* **QJ 207 N2MA**		**–**
	80	21	64	51	2,16	11 000	15 000	0,57	* **QJ 307 N2MA**	*	**QJ 307 MA**
	80	21	64	51	2,16	13 000	15 000	0,57	* **QJ 307 N2PHAS**		**–**
40	80	18	56	49	2,08	11 000	15 000	0,45	**–**	*	**QJ 208 MA**
	90	23	78	64	2,7	10 000	14 000	0,78	* **QJ 308 N2MA**	*	**QJ 308 MA**
	90	23	78	64	2,7	11 000	14 000	0,78	* **QJ 308 N2PHAS**		**–**
45	85	19	63	56	2,36	10 000	14 000	0,52	**–**	*	**QJ 209 MA**
	100	25	100	83	3,55	9 000	12 000	1,05	* **QJ 309 N2MA**	*	**QJ 309 MA**
	100	25	100	83	3,55	10 000	12 000	1,05	* **QJ 309 N2PHAS**		**QJ 309 PHAS**
50	90	20	65,5	61	2,6	9 000	13 000	0,59	**–**	*	**QJ 210 MA**
	110	27	118	100	4,25	8 000	11 000	1,35	**–**	*	**QJ 310 MA**
	110	27	118	100	4,25	9 000	11 000	1,35	**–**	*	**QJ 310 PHAS**
55	100	21	85	83	3,55	8 000	11 000	0,77	* **QJ 211 N2MA**	*	**QJ 211 MA**
	120	29	137	118	5	7 000	10 000	1,75	* **QJ 311 N2MA**	*	**QJ 311 MA**

[1] For available final variants → **matrix 3, page 502**
[2] For dimensions of locating slots → **table 3, page 484**
* SKF Explorer bearing

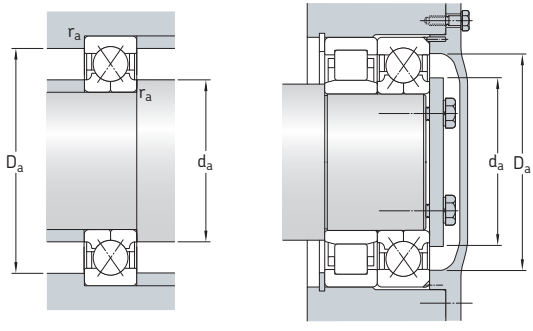

Dimensions					Abutment and fillet dimensions		
d	d_1 ~	D_1 ~	$r_{1,2}$ min.	a	d_a min.	D_a max.	r_a max.
mm					mm		
15	22	28,1	0,6	18	19,2	30,8	0,6
17	23,5	32,5	0,6	20	21,2	35,8	0,6
	27,7	36,3	1	22	22,6	41,4	1
20	27,5	40,8	1,1	25	27	45	1
	27,5	40,8	1,1	25	27	45	1
25	31,5	43	1	27	30,6	46,4	1
	34	49	1,1	30	32	55	1
30	37,5	50,8	1	32	35,6	56,4	1
	40,5	58,2	1,1	36	37	65	1
	40,5	58,2	1,1	36	37	65	1
35	44	59	1,1	37	42	65	1
	46,2	64,3	1,5	40	44	71	1,5
	46,2	64,3	1,5	40	44	71	1,5
40	49,5	66	1,1	42	47	73	1
	52	72,5	1,5	46	49	81	1,5
	52	72,5	1,5	46	49	81	1,5
45	54,5	72	1,1	46	52	78	1
	58	81,2	1,5	51	54	91	1,5
	58	81,2	1,5	51	54	91	1,5
50	59,5	76,5	1,1	49	57	83	1
	65	90	2	56	61	99	2
	65	90	2	56	61	99	2
55	66	84,7	1,5	54	64	91	1,5
	70,5	97,8	2	61	66	109	2

3.4 Four-point contact ball bearings
d **60–95** mm

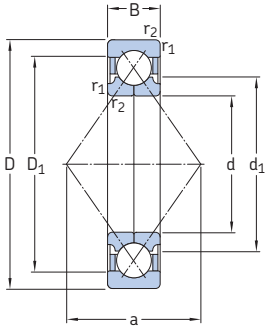

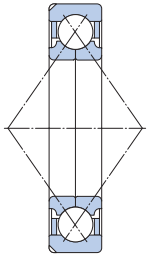

Bearing with locating slots

Principal dimensions			Basic load ratings dynamic	static	Fatigue load limit	Speed ratings Reference speed	Limiting speed	Mass	Designations[1] Bearing with locating slots[2]	without locating slots
d	D	B	C	C_0	P_u					
mm			kN		kN	r/min		kg	–	
60	110	22	96,5	93	4	7 500	10 000	0,99	* **QJ 212 N2MA**	* **QJ 212 MA**
	110	22	96,5	93	4	8 500	10 000	0,99	* **QJ 212 N2PHAS**	–
	130	31	156	137	5,85	6 700	9 000	2,15	* **QJ 312 N2MA**	* **QJ 312 MA**
	130	31	156	137	5,85	7 500	9 000	2,15	–	* **QJ 312 PHAS**
65	120	23	110	112	4,75	6 700	9 500	1,2	* **QJ 213 N2MA**	* **QJ 213 MA**
	120	23	110	112	4,75	8 000	9 500	1,2	* **QJ 213 N2PHAS**	–
	140	33	176	156	6,55	6 300	8 500	2,7	–	* **QJ 313 MA**
	140	33	176	156	6,55	7 000	8 500	2,7	* **QJ 313 N2PHAS**	-
70	125	24	120	122	5,2	6 300	9 000	1,3	* **QJ 214 N2MA**	* **QJ 214 MA**
	125	24	120	122	5,2	7 500	9 000	1,3	* **QJ 214 N2PHAS**	–
	150	35	200	180	7,35	5 600	8 000	3,15	* **QJ 314 N2MA**	* **QJ 314 MA**
	150	35	200	180	7,35	6 700	8 000	3,15	* **QJ 314 N2PHAS**	–
75	130	25	125	132	5,6	6 300	8 500	1,45	* **QJ 215 N2MA**	* **QJ 215 MA**
	130	25	125	132	5,6	7 000	8 500	1,45	* **QJ 215 N2PHAS**	–
	160	37	216	200	7,8	5 300	7 500	3,9	* **QJ 315 N2MA**	–
	160	37	216	200	7,8	6 300	7 500	3,9	* **QJ 315 N2PHAS**	–
80	140	26	146	156	6,4	5 600	8 000	1,85	* **QJ 216 N2MA**	* **QJ 216 MA**
	170	39	232	228	8,65	5 000	7 000	4,6	* **QJ 316 N2MA**	–
	170	39	232	228	8,65	5 600	7 000	4,6	* **QJ 316 N2PHAS**	–
85	150	28	156	173	6,7	5 300	7 500	2,25	* **QJ 217 N2MA**	* **QJ 217 MA**
	180	41	250	255	8,65	4 800	6 700	5,45	* **QJ 317 N2MA**	–
90	160	30	186	200	7,65	5 000	7 000	2,75	* **QJ 218 N2MA**	–
	190	43	285	305	11	4 500	6 300	6,45	* **QJ 318 N2MA**	–
	190	43	285	305	11	5 000	6 300	6,45	* **QJ 318 N2PHAS**	–
95	170	32	212	232	8,5	4 800	6 700	3,35	* **QJ 219 N2MA**	–
	200	45	305	340	11,8	4 300	6 000	7,45	* **QJ 319 N2MA**	–
	200	45	305	340	11,8	4 800	6 000	7,45	* **QJ 319 N2PHAS**	–

[1] For available final variants → **matrix 3**, **page 502**
[2] For dimensions of locating slots → **table 3**, **page 484**
* SKF Explorer bearing

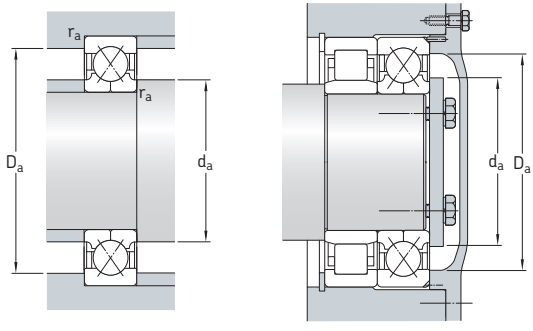

Dimensions					Abutment and fillet dimensions		
d	d_1 ~	D_1 ~	$r_{1,2}$ min.	a	d_a min.	D_a max.	r_a max.
mm					mm		
60	72	93	1,5	60	69	101	1,5
	72	93	1,5	60	69	101	1,5
	77	106	2,1	67	72	118	2
	77	106	2,1	67	72	118	2
65	78,5	101	1,5	65	74	111	1,5
	78,5	101	1,5	65	74	111	1,5
	82,5	115	2,1	72	77	128	2
	82,5	115	2,1	72	77	128	2
70	83,5	106	1,5	68	79	116	1,5
	83,5	106	1,5	68	79	116	1,5
	89	123	2,1	77	82	138	2
	89	123	2,1	77	82	138	2
75	88,5	112	1,5	72	84	121	1,5
	88,5	112	1,5	72	84	121	1,5
	104	131	2,1	82	87	148	2
	104	131	2,1	82	87	148	2
80	95,3	120	2	77	91	130	2
	111	139	2,1	88	92	158	2
	111	139	2,1	88	92	158	2
85	100	128	2	83	96	139	2
	117	148	3	93	99	166	2,5
90	114	136	2	88	101	149	2
	124	156	3	98	104	176	2,5
	124	156	3	98	104	176	2,5
95	120	145	2,1	93	107	158	2
	131	165	3	103	109	186	2,5
	131	165	3	103	109	186	2,5

3.4 Four-point contact ball bearings
d **100–200** mm

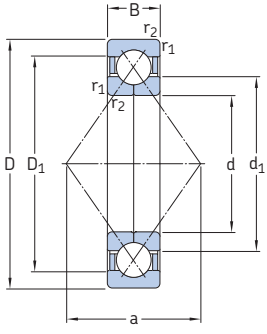

Basic design

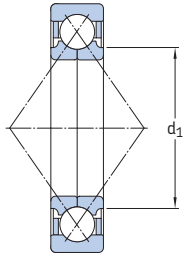

SKF Explorer bearing

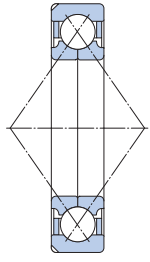

Bearing with locating slots

Principal dimensions			Basic load ratings dynamic	static	Fatigue load limit	Speed ratings Reference speed	Limiting speed	Mass	Designation[1] Bearing with locating slots[2]
d	D	B	C	C_0	P_u				
mm			kN		kN	r/min		kg	–
100	180	34	236	265	9,5	4 500	6 300	4,05	* **QJ 220 N2MA**
	215	47	345	400	13,7	4 000	5 600	9,3	* **QJ 320 N2MA**
110	200	38	280	325	11,2	4 000	5 600	5,6	* **QJ 222 N2MA**
	240	50	390	480	15,3	3 600	4 800	12,5	* **QJ 322 N2MA**
120	215	40	300	365	12	3 600	5 000	6,95	* **QJ 224 N2MA**
	260	55	415	530	16,3	3 200	4 500	16	* **QJ 324 N2MA**
130	230	40	310	400	12,7	3 400	4 800	7,75	* **QJ 226 N2MA**
	280	58	455	610	18	3 000	4 000	19,5	* **QJ 326 N2MA**
140	250	42	345	475	14,3	3 200	4 300	9,85	* **QJ 228 N2MA**
	300	62	500	695	20	2 800	3 800	24	* **QJ 328 N2MA**
150	270	45	400	570	16,6	3 000	4 000	12,5	* **QJ 230 N2MA**
	320	65	530	765	21,2	2 600	3 600	29	* **QJ 330 N2MA**
160	290	48	450	670	19	2 800	3 800	15,5	* **QJ 232 N2MA**
	340	68	570	880	23,6	2 400	3 400	34,5	* **QJ 332 N2MA**
170	310	52	455	720	20	2 600	3 400	19,5	* **QJ 234 N2MA**
	360	72	655	1 040	27	2 200	3 200	41,5	* **QJ 334 N2MA**
180	320	52	475	765	20,8	2 400	3 400	20,5	* **QJ 236 N2MA**
	380	75	680	1 100	28	2 200	3 000	47,5	* **QJ 336 N2MA**
190	340	55	510	850	22,4	2 200	3 200	23,5	* **QJ 238 N2MA**
	400	78	702	11 600	28,5	1 700	2 800	49	**QJ 338 N2MA**
200	360	58	540	915	23,2	1 800	3 000	28,5	**QJ 240 N2MA**

[1] For available final variants → **matrix 3**, **page 502**
[2] For dimensions of locating slots → **table 3**, **page 484**
* SKF Explorer bearing

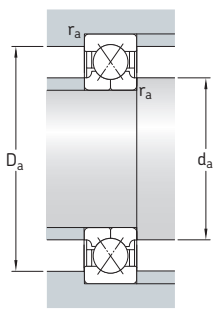

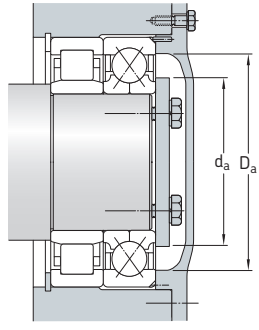

Dimensions					Abutment and fillet dimensions		
d	d_1 ~	D_1 ~	$r_{1,2}$ min.	a	d_a min.	D_a max.	r_a max.
mm					mm		
100	127	153	2,1	98	112	168	2
	139	176	3	110	114	201	2
110	141	169	2,1	109	122	188	2
	154	196	3	123	124	226	2,5
120	152	183	2,1	117	132	203	2
	169	211	3	133	134	246	2,5
130	165	195	3	126	144	216	2,5
	182	227	4	144	147	263	3
140	179	211	3	137	154	236	2,5
	196	244	4	154	158	282	3
150	194	226	3	147	164	256	2,5
	211	259	4	165	167	303	3
160	204	243	3	158	174	276	2,5
	224	276	4	175	177	323	3
170	204	243	4	168	187	293	3
	237	293	4	186	187	343	3
180	231	269	4	175	197	303	3
	252	309	4	196	197	363	3
190	244	285	4	185	207	323	3
	263	326	5	207	210	380	4
200	258	302	4	196	217	363	3