Compact Multiprotocol I/O Module for Ethernet
4 Universal Digital Channels, Configurable as PNP Inputs or 2.0 A Outputs
TBEN-S1-4DXP

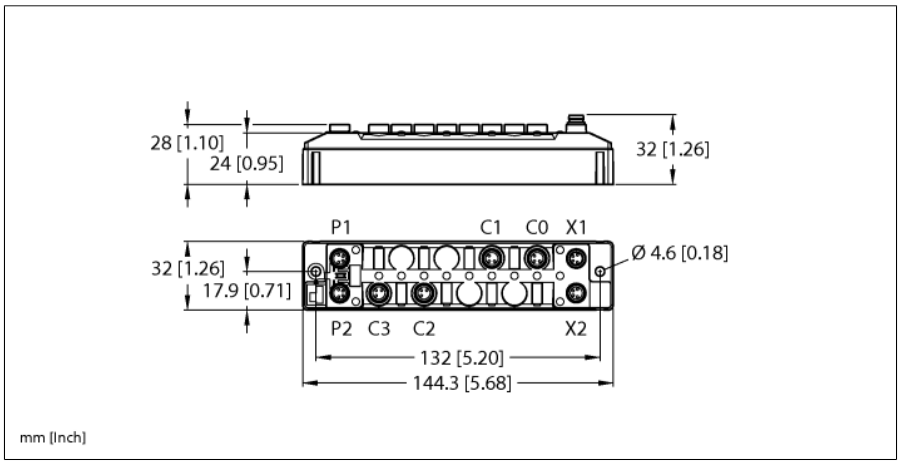

- **PROFINET device, EtherNet/IP device or Modbus TCP slave**
- **Integrated Ethernet switch**
- **Supports 10 Mbps / 100 Mbps**
- **2x M8, 4-pin, Ethernet fieldbus connection**
- **Glass fiber reinforced housing**
- **Shock and vibration tested**
- **Fully potted module electronics**
- **Protection classes IP65, IP67, IP69K**
- **M8, 4-pin connector for power supply**
- **Galvanically isolated voltage groups**
- **Input diagnostics per group**
- **Max. 2 A per output**
- **Output diagnostics per channel**
- **One freely selectable digital channel per port**

Type designation	TBEN-S1-4DXP
Ident no.	100006468

Supply	
Supply voltage	24 VDC
Admissible range	18…30 VDC Total current max. 4 A per voltage group Total current V1 + V2 max. 5.5 A at 70 °C per module
Voltage supply connection	2 × M8, 4-pin
Operating current	V1: max. 150 mA
Sensor/Actuator supply V_{AUX1}	Ports C0-C1 powered by V1 Short-circuit proof, 24 V:2.0 A per port
Sensor/Actuator supply V_{AUX2}	Ports C2-C3 powered by V2 Short-circuit proof, 2.0 A per port
Electrical isolation	galvanic isolation of the voltage groups V1 and V2, voltages up to 500 VAC

System data	
Fieldbus transmission rate	10 Mbps/100 Mbps
Fieldbus connection technology	2 × M8, 4-pin
Protocol detection	automatic
Web server	default: 192.168.1.254
Service interface	Ethernet via P1 or P2

Modbus TCP	
Addressing	Static IP, DHCP
Supported function codes	FC1, FC2, FC3, FC4, FC5, FC6, FC15, FC16, FC23
Number of TCP connections	8
Input register start address	0 (0x0000 hex)
Output register start address	2048 (0x0800 hex)

Ethernet/IP	
Addressing	acc. to EtherNet/IP specification
Quick Connect (QC)	< 500 ms
Device Level Ring (DLR)	supported
Class 3 connections (TCP)	3
Class 1 connections (CIP)	10
Input Assembly Instance	103
Output Assembly Instance	104
Configuration Assembly Instance	106

Edition • 2021-04-09T08:21:49+02:00

Compact Multiprotocol I/O Module for Ethernet
4 Universal Digital Channels, Configurable as PNP Inputs or 2.0 A Outputs
TBEN-S1-4DXP

PROFINET	
Addressing	DCP
Conformance class	B (RT)
MinCycleTime	1 ms
Fast Start-Up (FSU)	< 500 ms
Diagnostics	acc. to PROFINET alarm handling
Topology detection	supported
Automatic addressing	supported
Media Redundancy Protocol (MRP)	supported

Digital inputs	
Number of channels	4
Connectivity inputs	M8, 3-pin
Input type	PNP
Type of input diagnostics	Group diagnostics
Switching threshold	EN 61131-2 Typ 3, PNP
Low level signal voltage	< 5 V
High level signal voltage	> 11 V
Low level signal current	< 1.5 mA
High level signal current	> 2 mA
Input delay	0.2 ms / 3 ms
Electrical isolation	Galvanically isolated to the fieldbus Voltage proof up 500 VDC

Digital outputs	
Number of channels	4
Connectivity outputs	M8, 3-pol
Output type	PNP
Type of output diagnostics	Channel diagnostics
Output voltage	24 VDC from potential group
Output current per channel	2.0 A, short-circuit proof
Load type	EN 60947-5-1: DC-13
Short-circuit protection	yes
Electrical isolation	Galvanically isolated to the fieldbus Voltage proof up 500 VDC

Standard/Directive conformity	
Vibration test	acceleration to 20 g acc. to EN 60068-2-6
Shock test	acc. to EN 60068-2-27
Drop and topple	acc. to EN 60068-2-31/IEC 60068-2-32
Electromagnetic compatibility	acc. to EN 61131-2
Approvals and certificates	CE, FCC, UV-resistant in accordance with DIN EN ISO 4892-2A (2013)
UL Certificate	cULus LISTED 21 W2, Encl.Type 1 IND.CONT.EQ.

General Information	
Dimensions (W x L x H)	32 x 144 x 32mm
Operating temperature	-40…+70 °C
Storage temperature	-40 °C … +85 °C
Altitude	max. 5000 m
Protection class	IP65 IP67 IP69K
MTTF	307 years acc. to SN 29500 (Ed. 99) 20 °C
Housing material	PA6-GF30
Housing color	Black
Material label	Polycarbonate
Halogen-free	yes
Mounting	2 mounting holes □ 4.6 mm

Edition • 2021-04-09T08:21:49+02:00

<table>
<tr>
<td>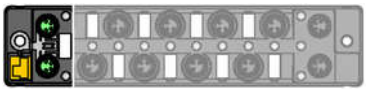</td>
<td>Note
It is strongly recommended to use only ready-made Ethernet cables!
Ethernet cable (example):
M8-M8:
ID number 6630376 PSG4M-0,2-PSG4M/TXN
ID number 6934033 PSGS4M-PSGS4M-4416-1M
M8-RJ45:
ID number 6935342 PSGS4M-RJ45S-4416-1M
M8-M12:
ID number 6935351 RSSD-PSGS4M-4416-2M</td>
<td>M8 × 1 Ethernet
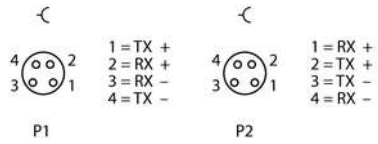
</td>
</tr>
<tr>
<td>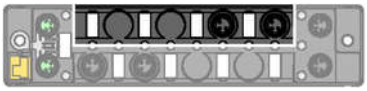</td>
<td>Note
Actuator and sensor cable/PUR connection cable (example):
M8 – open end
ID number 6625562 PSG3M-2/TXL
M8-M8
ID number 6625665 PKG3M-0,3-PSG3M/TXL
ID number 6627137 PKG3M-3-PSG3M/TXL</td>
<td>M8 × 1 I/O port
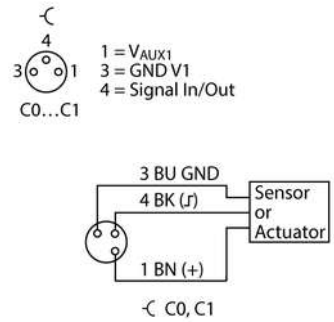
</td>
</tr>
<tr>
<td></td>
<td></td>
<td>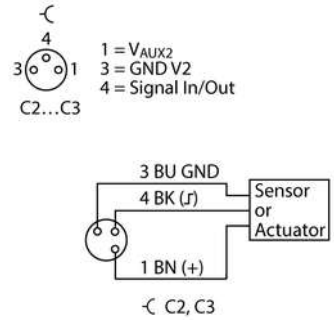
</td>
</tr>
<tr>
<td>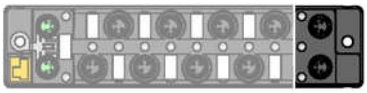</td>
<td>Note
Power supply cable (example):
M8-M8
ID number 6627044 PKG4M-0,2-PSG4M/TXL
ID number 6626679 PKG4M-4-PSG4M/TXL</td>
<td>M8 × 1 Power Supply
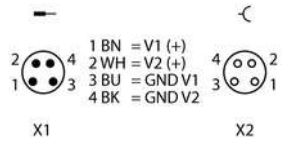
</td>
</tr>
</table>

Edition • 2021-04-09T08:21:49+02:00

Module Status LED

LED	Color	Status	Description
ETH1 / ETH2	Green	ON	Ethernet link (100 Mbps)
		flashing	Ethernet communication (100 Mbps)
	Yellow	ON	Ethernet link (10 Mbps)
		flashing	Ethernet communication (10 Mbps)
		OFF	No Ethernet link
BUS	Green	ON	Active connection to a master
		Flashing	Steady flashing: Ready Sequence of 3 flashes in 2 seconds: FLC/ARGEE active
	Red	ON	IP address conflict or Restore Mode or Modbus timeout
		Flashing	Blink/Wink command active
	Red/ Green	Alternating	Waiting for assignment of an IP address, DHCP or BootP
		OFF	Power off
ERR	Green	On	Diagnostics disabled
	Red	ON	Diagnostics enabled V_2 undervoltage diagnosis is parameter-dependent
	LED response master in the Beep network:		
	Green	1 Hz, 250 ms off	Cyclical IO data exchange
	Green/Red	1 Hz, 250 ms red	Cyclical IO data exchange, diagnostics available
	Green/Red	1 Hz, alternating	Discovery mode active
	Red		Discovery mode active, diagnostics available
PWR	Green	ON	V_1 and V_2 power on
	Red	ON	V_2 power off or below defined tolerance of 18 V
		OFF	V_1 power off or below defined tolerance of 18 V

LED Status I/O

LED	Color	Status	Description
LED 0 … 3	Green	On	Input or output active
	Red	On	Output active with overload/short circuit
		Flashing	Overload of the power supply slot. All LEDs in the affected group C0–C1 or C2–C3 are flashing.
		Off	Input or output inactive

Edition • 2021-04-09T08:21:49+02:00

Process Data Mapping of the Single Protocols

For more details on the corresponding protocols see manual.

Edition • 2021-04-09T08:21:49+02:00