

Image may differ from product. See technical specification for details.

YAR 213-2RF

Insert bearing with set screw locking and extended inner ring

Insert bearings are based on sealed deep groove ball bearings. This variant is suitable for applications with both constant and alternating directions of rotation. It has an inner ring extended on both sides and is locked onto the shaft by tightening two (set) screws on the inner ring, making it easy to mount.

- Designed for a constant and alternating rotation
- Quick and easy to mount onto the shaft
- Reduce noise and vibration levels

Overview

Dimensions

Shaft diameter	65 mm
Bore diameter	65 mm
Outside diameter	120 mm
Width, total	68.3 mm
Width, inner ring	68.3 mm
Width, outer ring	27 mm

Performance

Basic dynamic load rating	57.2 kN
Basic static load rating	40 kN
Limiting speed	1 600 r/min
Note	Limiting speed with shaft tolerance h6

Properties

Retaining feature, inner ring	Set screws
Bore type	Cylindrical
Rolling elements	Balls
Outer ring type	Spherical
Inner ring extension	On both sides
Cage	Non-metallic
Rubber seating ring	Without
Material, bearing	Bearing steel
Coating	Without
Sealing	Seal and flinger on both sides
Sealing type	Contact, multiple
Lubricant	Grease
Relubrication feature	With

Logistics

Product net weight	1.76 kg
eClass code	23-05-08-02

UNSPSC code	31171536

Technical specification

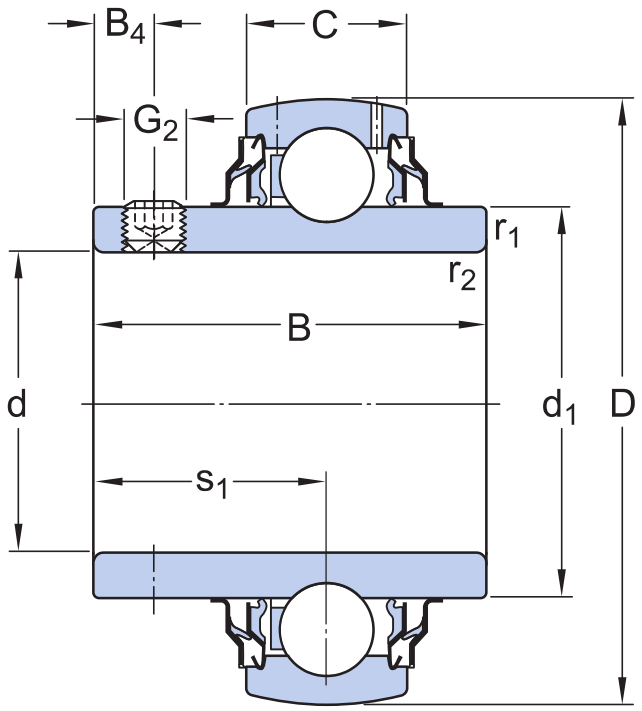

Dimensions

d	65 mm	Bore diameter
D	120 mm	Outside diameter
B	68.3 mm	Width of inner ring
C	27 mm	Width of outer ring
d_1	≈ 82.5 mm	Outside diameter of inner ring
B_4	10 mm	Distance face to thread centre
$r_{1,2}$	min. 1.5 mm	Chamfer dimension of inner ring
s_1	42.9 mm	Distance from locking device side face to raceway centre

Calculation data

Basic dynamic load rating	C	57.2 kN
Basic static load rating	C_0	40 kN
Fatigue load limit	P_u	1.7 kN
Limiting speed		1 600 r/min
		Limiting speed with shaft tolerance h6

Calculation factor	f_0	15

Mounting information

Set screw	G_2	M10x1
Hexagonal key size for set screw	N	5 mm
Recommended tightening torque for set screw		16.5 N·m

Associated products

Tolerances and clearances

GENERAL BEARING SPECIFICATIONS

- Tolerances: table 1, table 2
- Radial internal clearance: Standard inner ring, Other bearings

BEARING INTERFACES

- Shaft tolerances

More Information

Product details

- Designs and variants
- Lubrication
- General bearing specifications
- Loads
- Temperature limits
- Permissible speed
- Design considerations
- Mounting and dismounting
- Designation system

Engineering information

- Principles of rolling bearing selection
- General bearing knowledge
- Bearing selection process
- Bearing failure and how to prevent it

Tools

- SKF Product select
- Bearing Frequency Calculator
- SimPro Quick
- Heater selection tool

Terms of use

By accessing and using this website / app owned and published by AB SKF (publ.) (556007-3495 · Gothenburg) (“SKF”), you agree to the following terms and conditions:

Warranty Disclaimer and Limitation of Liability

Although every care has been taken to assure the accuracy of the information on this website / app, SKF provides this information "AS IS" and DISCLAIMS ALL WARRANTIES, EXPRESS OR IMPLIED, INCLUDING, BUT NOT LIMITED TO, IMPLIED WARRANTIES OF MERCHANTABILITY AND FITNESS FOR A PARTICULAR PURPOSE. You acknowledge that your use of this website / app is at your sole risk, that you assume full responsibility for all costs associated with use of this website / app, and that SKF shall not be liable for any direct, incidental, consequential, or indirect damages of any kind arising out of your access to, or use of the information or software made available on this website / app.

Any warranties and representations in this website / app for SKF products or services that you purchase or use will be subject to the agreed upon terms and conditions in the contract for such product or service.

Further, for non-SKF websites / apps that are referenced in our website / app or where a hyperlink appears, SKF makes no warranties concerning the accuracy or reliability of the information in these websites / apps and assumes no responsibility for material created or published by third parties contained therein. In addition, SKF does not warrant that this website / app or these other linked websites / apps are free from viruses or other harmful elements.

Third Party Services

When viewing YouTube content via the SKF website(s) (i.e. using YouTube API Services), you agree to be bound by the YouTube Terms of Service.

Copyright

Copyright in this website / app copyright of the information and software made available on this website / app rest with SKF or its licensors. All rights are reserved. All licensed material will reference the licensor that has granted SKF the right to use the material. The information and software made available on this website / app may not be reproduced, duplicated, copied, transferred, distributed, stored, modified, downloaded or otherwise exploited for any commercial use without the prior written approval of SKF. However, it may be reproduced, stored and downloaded for use by individuals without prior written approval of SKF. Under no circumstances may this information or software be supplied to third parties.

This website /app includes certain images used under license from Shutterstock, Inc.

Trademarks and Patents

All trademarks, brand names, and corporate logos displayed on the website / app are the property of SKF or its licensors, and may not be used in any way without prior written approval by SKF. All licensed trademarks published on this website / app reference the licensor that has granted SKF the right to use the trademark. Access to this website / app does not grant to the user any license under any patents owned by or licensed to SKF.

Changes

SKF reserves the right to make changes or additions to this website / app at any time.