B6503229

RAILTEC B, 4 modules, Vers. low profile

Enclosure with open connection sides - for max. 4 terminal guards in flat version (acc.). Fast and simple locking capability onto DIN rails EN 60715 TH35.

Version
Individual configuration see accessories

Supply
1 base part with locking clip, 1 top part

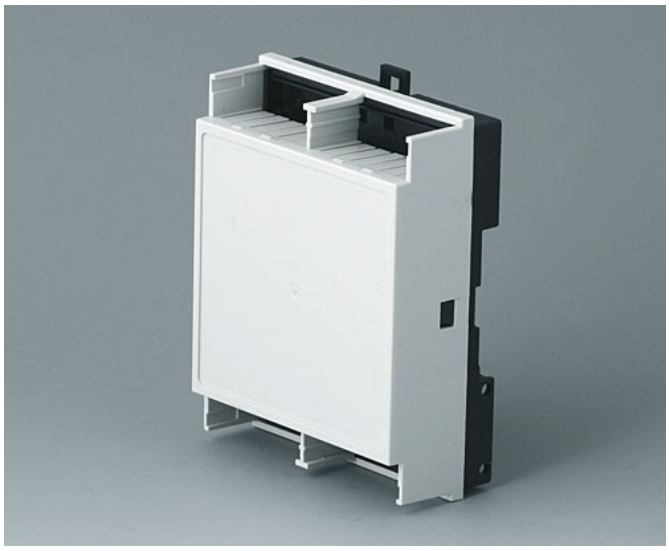

TECHNICAL DATA

Material	PC (UL 94 V-0) Top part, PPO (UL 94 V-0) Bottom part
Colour	Top part light grey RAL 7035, Bottom part black, Locking clip black
Standards	RoHS compliant, DIN EN 60715 TH35, DIN VDE 0470-1, DIN 43880 unit 1, REACH compliant, VBG 4, IEC 529

Width	70 mm
Height	89.6 mm
Depth	31.25 mm
PCB length, base	82 mm
PCB width, base	64 mm
Keypad length	60 mm
Keypad width	64.4 mm
Pitch	5.0 mm
Poles	≤ 24

Please take the dimensions from current parts. These are subject to material- and manufacturing-specific tolerances.

B6503229

RAILTEC B, 4 modules, Vers. low profile

PURCHASING DATA

Weight/1 part	41 g
Customs tariff number (OKW product)	39269097
Country of manufacture	Denmark

CUSTOMISING OPTIONS

What else do you need to create your own personal product? We can supply our enclosures and tuning knobs fully modified to suit your electronic components and design requirements. Please advise for anything else we can do for you.

Customising options for B6503229



Machining



Printing



Laser marking



Decor foils



Installation / Assembly of accessories

B6503229

RAILTEC B, 4 modules, Vers. low profile

ACCESSORY "WALL/HOLDER"



B6600334
Wall suspension elements
PPO (UL 94 V-0)
black

ACCESSORY "TERMINALS"

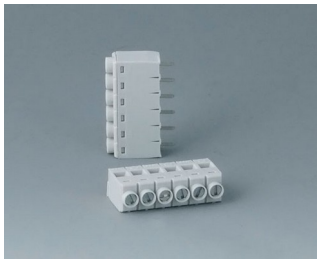

B6607111
Terminal block, block 5.0
PA 68 (UL 94 V-0)

ACCESSORY "TERMINAL GUARDS"



B6607140
Terminal guards, flat
PC (UL 94 V-0)
light grey



B6607141
Terminal guards, flat
PC (UL 94 V-0)
light grey



B6607142
Terminal guards, flat
PC (UL 94 V-0)
light grey



B6607143
Terminal guards, flat
PC (UL 94 V-0)
light grey



B6607145
KNX Cover, flat
PC (UL 94 V-0)
light grey

B6503229

RAILTEC B, 4 modules, Vers. low profile

ACCESSORY "SCREWS"



A0305031
Self-tapping screws 2.5 x 6 mm
(PZ1)

Subject to technical modification without notice. © by OKW Gehäusesysteme, Buchen/Germany.

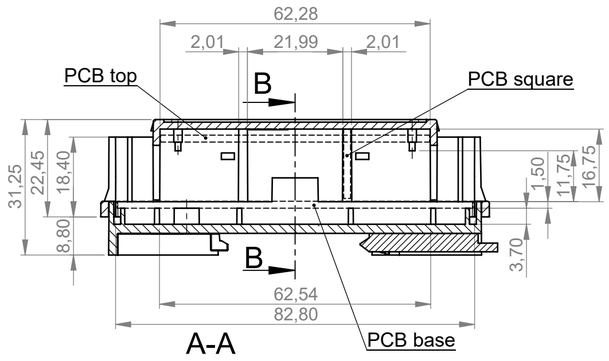

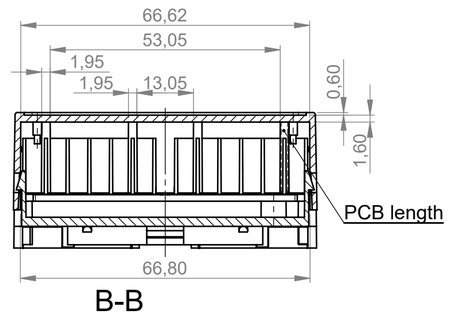

Platine längs
PCB length

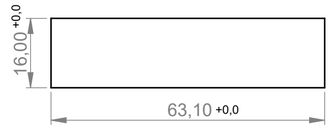

Platine quer
PCB square

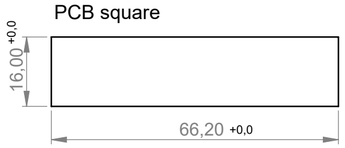

Folientastatur
Membrane keyboard

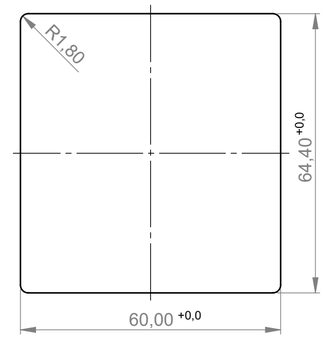

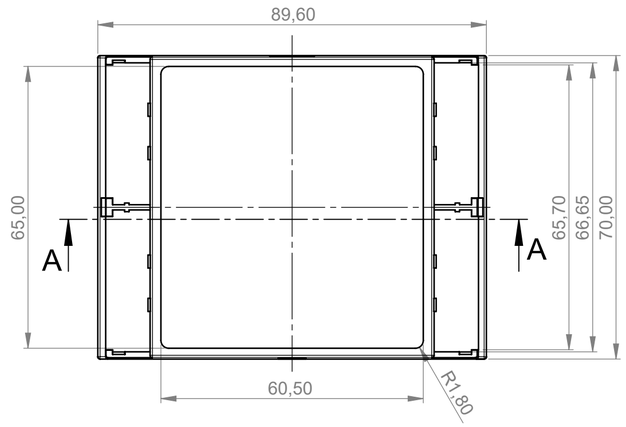

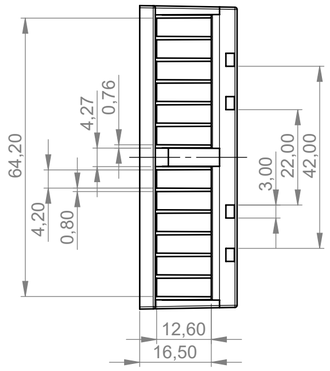

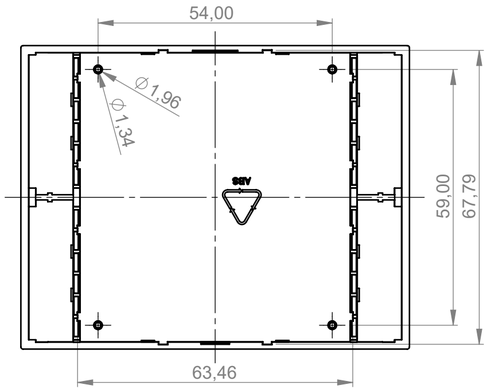

Platine Oberteil
PCB top

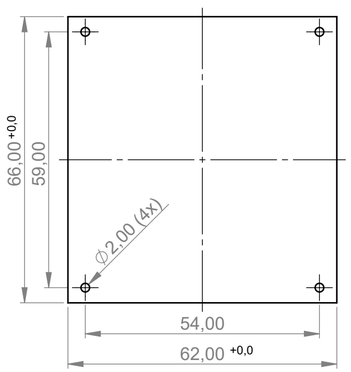

Unterteil
Base

Bohrungen für Wandhalter
holes for wall suspension element

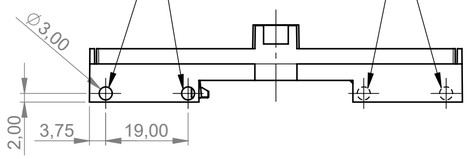

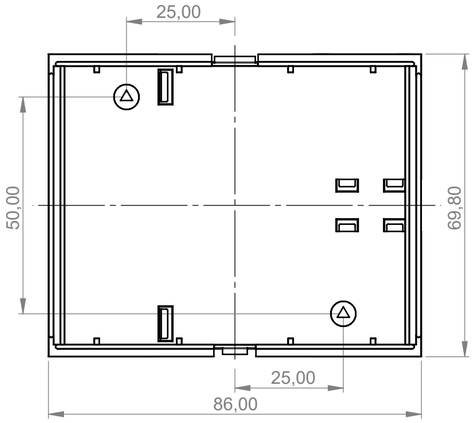

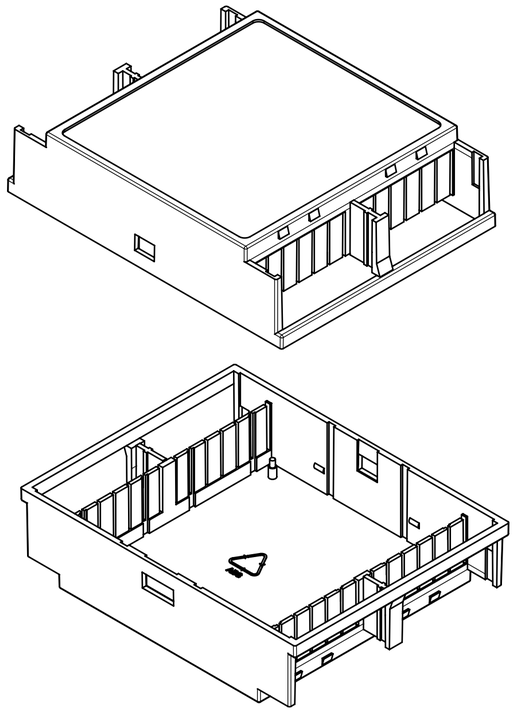

Leiterplatte für das Unterteil
Raster 5.0

PCB for base
block 5.0

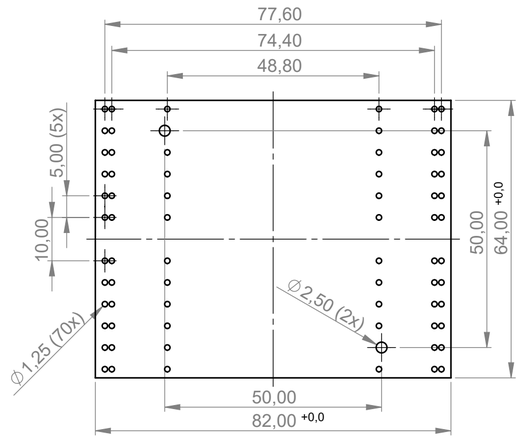

Bitte die Maße an aktuellen Teilen abnehmen. Diese unterliegen material- und produktionsspezifischen Fertigungstoleranzen.

Please take the dimensions from current parts. These are subject to material- and manufacturing-specific tolerances.

Informationskopie
wird nicht aktualisiert
Copy for Information
will not be updated

Technische Änderungen vorbehalten. Irrtümer oder Druckfehler begründen keinen Anspruch auf Schadenersatz. Wichtige Einbaumaße bitte direkt mit dem aktuellen Produkt abstimmen.

Subject to technical modification without prior notice. Typographical and other errors do not justify any claim for damages. All dimensions should be verified using an actual moulded part.

Sous reserve de modifications techniques. Toute erreur ou faute d'impression ne justifie aucune demande d'indemnisation. Nous prions les clients de verifier les dimensions des composants avec les boitiers avant le montage.

Erst. am:	04.02.2014	Toleranzen:	Status:	
Erst. von:	D. Hasselbach	DIN 16901 T130	ÄNDERUNG	DIN 6 Teil 2
Freig. am:		Volumen:	Zeichnungsart:	
Freig. von:			KUNDE	
Revision:	02			

This document contains proprietary information of OKW Gehäusesysteme GmbH and is tendered subject to the conditions that the information be retained in confidence not be reproduced or copied and not be used or incorporated in any product.

RAILTEC B 4 Module
Vers. low profile

B6503229 | M 1:1

Für dieses Dokument behalten wir uns alle Urheberrechte vor. Es darf auch auszugsweise weder vervielfältigt noch Dritten in irgendeiner Form zugänglich gemacht werden.

Dateiname: 00016102