A1101006

Pin

Marking element simply to pin up, even subsequent exchange is possible. The lateral screw fixing becomes invisible by pinning up. With this, also the contact with live parts will be excluded.

Supply
1 Pin



TECHNICAL DATA

Material	PA 6 (UL 94 HB)
Colour	sky
Standards	RoHS compliant, REACH compliant

Please take the dimensions from current parts. These are subject to material- and manufacturing-specific tolerances.

PURCHASING DATA

Weight/1 part	0.2 g
Customs tariff number (OKW product)	84879090
Country of manufacture	Germany

A1101006

Pin

SYSTEM COMPONENTS TO COMPLETE



A1016048
TOP-KNOBS 16
PA 6
volcano
16x16mm 4mm



A1016049
TOP-KNOBS 16
PA 6
nero
16x16mm 4mm



A1016068
TOP-KNOBS 16
PA 6
volcano
16x16mm 6mm



A1016069
TOP-KNOBS 16
PA 6
nero
16x16mm 6mm



A1016648
TOP-KNOBS 16
PA 6
volcano
16x16mm



A1016649
TOP-KNOBS 16
PA 6
nero
16x16mm



A1020048
TOP-KNOBS 20
PA 6
volcano
20x16mm 4mm



A1020049
TOP-KNOBS 20
PA 6
nero
20x16mm 4mm



A1020068
TOP-KNOBS 20
PA 6
volcano
20x16mm 6mm



A1020069
TOP-KNOBS 20
PA 6
nero
20x16mm 6mm



A1020638
TOP-KNOBS 20
PA 6
volcano
20x16mm 1/4″



A1020639
TOP-KNOBS 20
PA 6
nero
20x16mm 1/4″



A1020648
TOP-KNOBS 20
PA 6
volcano
20x16mm



A1020649
TOP-KNOBS 20
PA 6
nero
20x16mm



A1024048
TOP-KNOBS 24
PA 6
volcano
24x16mm 4mm



A1024049
TOP-KNOBS 24
PA 6
nero
24x16mm 4mm

A1101006

Pin



A1024068
TOP-KNOBS 24
PA 6
volcano
24x16mm 6mm



A1024069
TOP-KNOBS 24
PA 6
nero
24x16mm 6mm



A1024638
TOP-KNOBS 24
PA 6
volcano
24x16mm 1/4″



A1024639
TOP-KNOBS 24
PA 6
nero
24x16mm 1/4″



A1024648
TOP-KNOBS 24
PA 6
volcano
24x16mm



A1024649
TOP-KNOBS 24
PA 6
nero
24x16mm



A1031048
TOP-KNOBS 31
PA 6
volcano
31x16mm 4mm



A1031049
TOP-KNOBS 31
PA 6
nero
31x16mm 4mm



A1031068
TOP-KNOBS 31
PA 6
volcano
31x16mm 6mm



A1031069
TOP-KNOBS 31
PA 6
nero
31x16mm 6mm



A1031638
TOP-KNOBS 31
PA 6
volcano
31x16mm 1/4″



A1031639
TOP-KNOBS 31
PA 6
nero
31x16mm 1/4″



A1031648
TOP-KNOBS 31
PA 6
volcano
31x16mm



A1031649
TOP-KNOBS 31
PA 6
nero
31x16mm



A1040048
TOP-KNOBS 40
PA 6
volcano
40x16mm 4mm



A1040049
TOP-KNOBS 40
PA 6
nero
40x16mm 4mm

A1101006

Pin



A1040068
TOP-KNOBS 40
PA 6
volcano
40x16mm 6mm



A1040069
TOP-KNOBS 40
PA 6
nero
40x16mm 6mm



A1040638
TOP-KNOBS 40
PA 6
volcano
40x16mm 1/4″



A1040639
TOP-KNOBS 40
PA 6
nero
40x16mm 1/4″



A1040648
TOP-KNOBS 40
PA 6
volcano
40x16mm



A1040649
TOP-KNOBS 40
PA 6
nero
40x16mm

Subject to technical modification without notice. © by OKW Gehäusesysteme, Buchen/Germany.

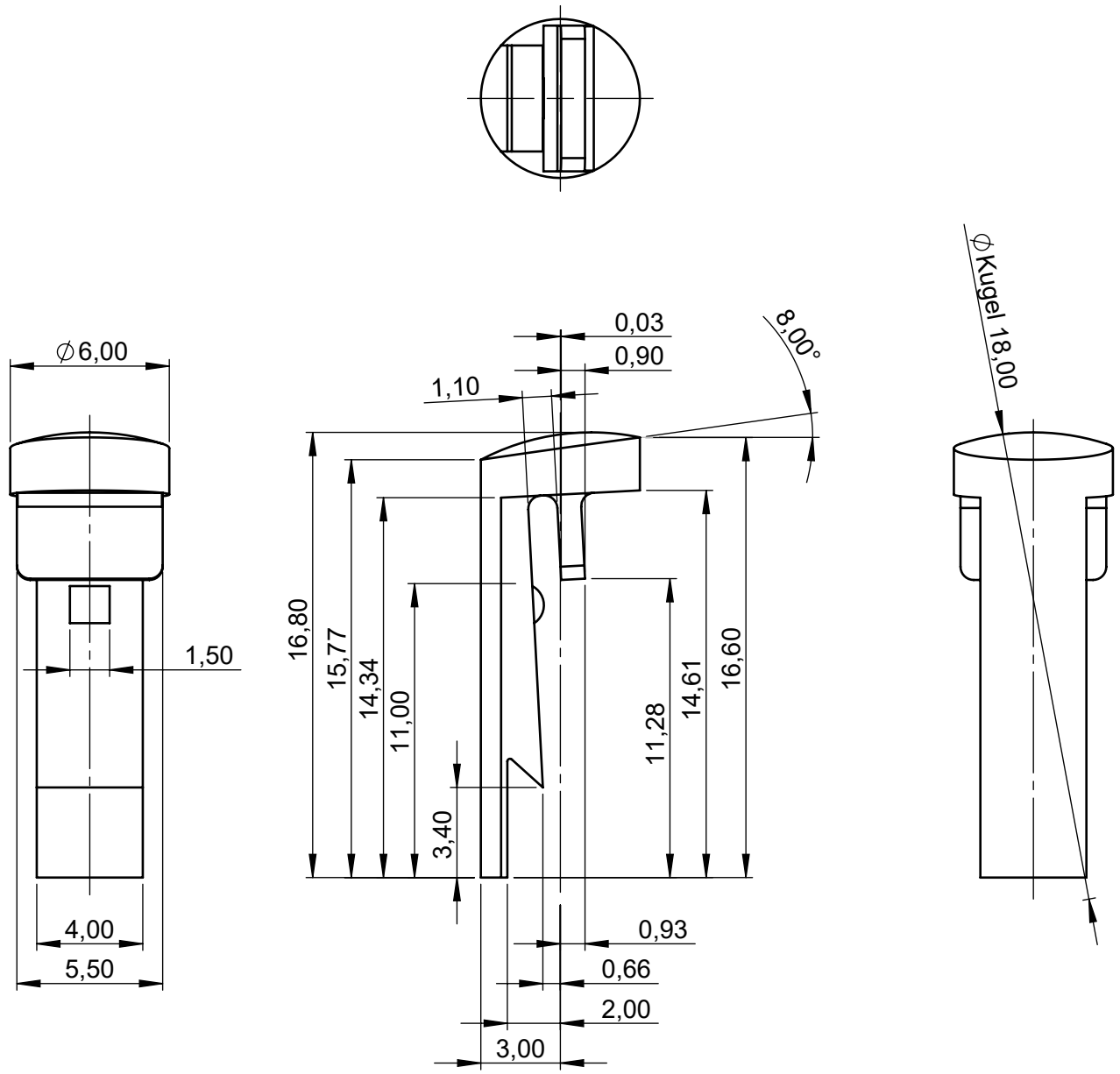

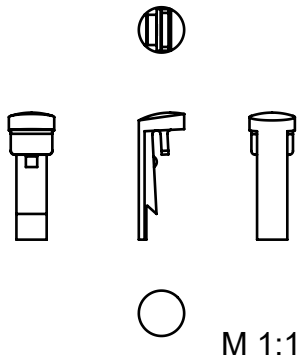

Bitte die Maße an aktuellen Teilen abnehmen.
Diese unterliegen material und produktionsspezifischen Fertigungstoleranzen

Please take the dimensions from current parts.
These are subject to material- and manufacutring-specific tolerances

Informationskopie
wird nicht aktualisiert
Copy for Information
will not be updated

Erst. am: 25.07.2022	Toleranzen:	Status:	
Erst. von: J. Wiesbächer	DIN 16901 T130	ENTWICKLUNG	DIN 6 Teil 2
Freig. am:	Volumen:	Zeichnungsart:	
Freig. von:		KUNDE	
Revision: 01			

Technische Änderungen vorbehalten. Irrtümer oder Druckfehler begründen keinen Anspruch auf Schadenersatz. Wichtige Einbaumaße bitte direkt mit dem aktuellen Produkt abstimmen.

Subject to technical modification without prior notice. Typographical and other errors do not justify any claim for damages. All dimensions should be verified using an actual moulded part.

Sous reserve de modifications techniques. Toute erreur ou faute d'impression ne justife aucune demande d'indemnisation. Nous prions les clients de verifer les dimensions des composants avec les boitiers avant le montage.

OKW GEHÄUSE SYSTEME

This document contains proprietary information of OKW Gehäusesysteme GmbH and is tendered subject to the conditions that the information be retained in confidence not be reproduced or copied and not be used or incorporated in any product.

TOP-KNOBS Zub
Pin

A110100.	M 4:1
Für dieses Dokument behalten wir uns alle Urheberrechte vor. Es darf auch auszugsweise weder vervielfältigt noch Dritten in irgendeiner Form zugänglich gemacht werden.	Dateiname: 00007427