IM5038

Inductive sensor

IME2020-FRKG

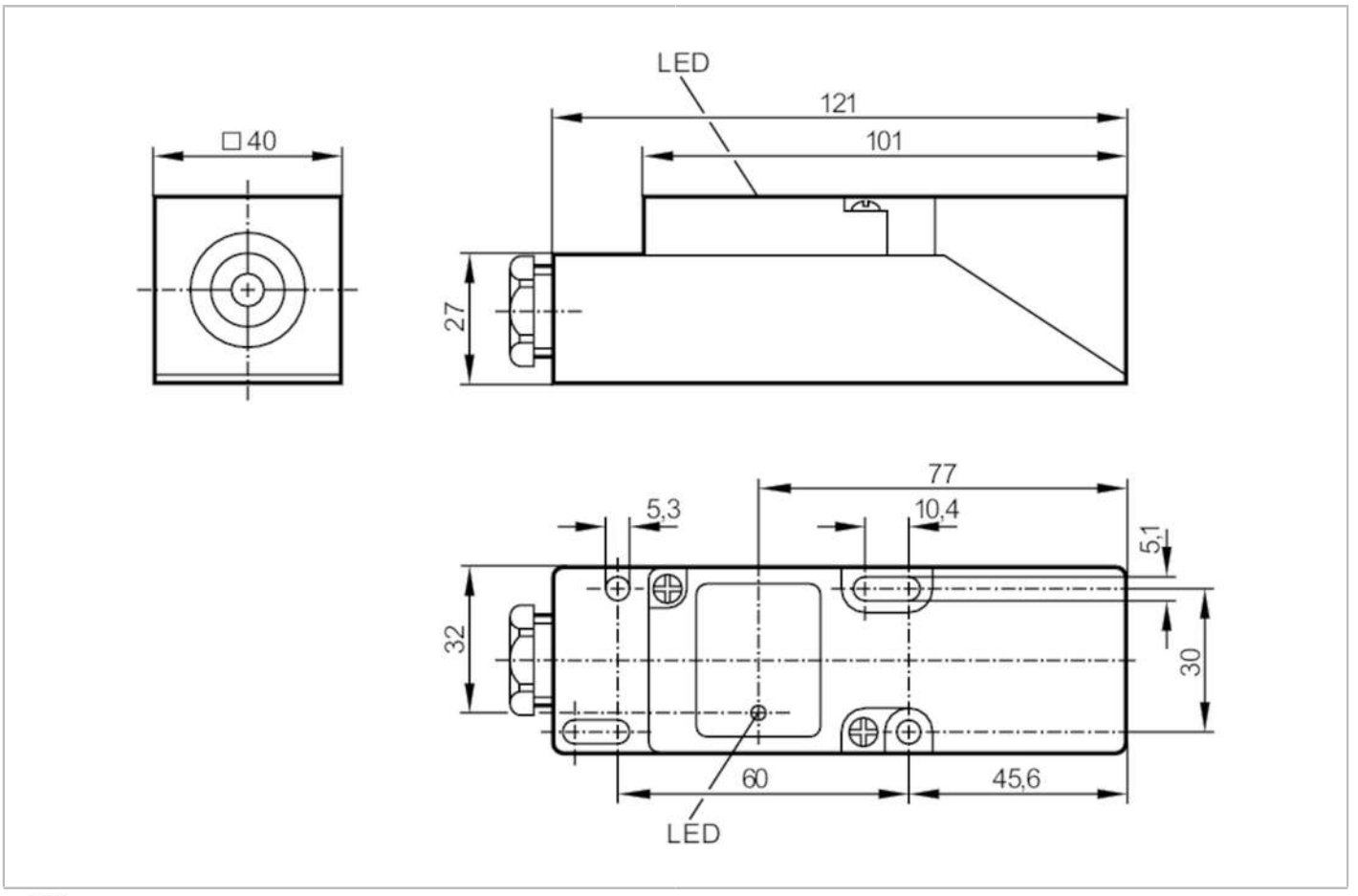

Product characteristics		
Electrical design		PNP/NPN
Output function		normally open / normally closed; (selectable)
Sensing range	[mm]	20
Housing		rectangular
Dimensions	[mm]	40 x 40 x 120
Electrical data		
Operating voltage	[V]	10...55 DC
Protection class		II
Reverse polarity protection		yes
Outputs		
Electrical design		PNP/NPN
Output function		normally open / normally closed; (selectable)
Max. voltage drop switching output DC	[V]	4.6
Minimum load current	[mA]	4
Max. leakage current	[mA]	1
Permanent current rating of switching output DC	[mA]	400
Switching frequency DC	[Hz]	300

IM5038

Inductive sensor

IME2020-FRKG

Short-circuit protection		yes
Type of short-circuit protection		pulsed
Overload protection		yes
Detection zone		
Sensing range	[mm]	20
Real sensing range Sr	[mm]	20 ± 10 %
Operating distance	[mm]	0...16.2
Accuracy / deviations		
Correction factor		steel: 1 / stainless steel: 0.7 / brass: 0.4 / aluminium: 0.3 / copper: 0.2
Hysteresis	[% of Sr]	1...15
Switch point drift	[% of Sr]	-10...10
Operating conditions		
Ambient temperature	[°C]	-25...80
Protection		IP 65
Tests / approvals		
EMC		EN 60947-5-2
MTTF	[years]	1633
Mechanical data		
Weight	[g]	183.5
Housing		rectangular
Mounting		non-flush mountable
Dimensions	[mm]	40 x 40 x 120
Materials		PPE
Displays / operating elements		
Display	switching status	1 x LED, yellow
Remarks		
Remarks		5 positions of the active zone possible
Pack quantity		1 pcs.
Electrical connection		

terminals: ...2.5 mm²; Cable sheath: Ø 7...13 mm; Cable gland: M20 X 1.5

Connection

