Assisting the automation industry since 1986

User manual
METER
ProSens

- Firmware: v.1.0 or higher
- Input type: universal and digital
- measurement of environmental parameters



Read the user's manual carefully before starting to use the unit or software.
Producer reserves the right to implement changes without prior notice.

CONTENTS

1. BASIC REQUIREMENTS AND USER SAFETY....3
2. GENERAL CHARACTERISTICS....4
3. TECHNICAL DATA....5
4. DEVICE INSTALLATION....7
4.1. UNPACKING....8
4.2. ASSEMBLY....8
4.3. CONNECTION METHOD....9
5. FRONT PANEL DESCRIPTION....43
6. PRINCIPLE OF OPERATION....44
6.1. LOGIC STRUCTURE....44
6.2. INPUT TYPES....45
6.2.1. Digital Input....45
6.2.2. Modbus Input....45
6.2.3. Universal Input....45
6.3. MEASUREMENT MODE....46
6.3.1. Detection of the peak values....47
6.4. DISPLAYED VALUES CALCULATION....48
6.4.1. Ways for measurement calculations....48
6.4.1.1. Linear characteristic....48
6.4.1.2. Square characteristic....49
6.4.1.3. Square root characteristic....49
6.4.1.4. User defined characteristic....50
6.4.1.5. Volume characteristics of a cylindrical tank....51
6.4.1.6. Examples of calculations....54
6.5. CONTROL OF THE RELAY OUTPUTS....59
6.5.1. One threshold mode....60
6.5.2. Two thresholds mode....61
6.6. THE ALARM LED....62
7. DEVICE PROGRAMMING....63
7.1. PROGRAMMING MENU....63
7.2. PARAMETERS EDITION....64
7.2.1. Numeric parameters....64
7.2.2. Switch parameters....64
7.2.3. Slide parameters....64
7.2.4. Text parameters....64
7.3. MENU DESCRIPTION....66
7.3.1. “Screen settings” menu....66
7.3.2. “Inputs” menu....67
7.3.3. “Outputs” menu....73
7.3.4. “Buzzer” menu....77
7.3.5. “Password” option....77
7.3.6. ”RS485 settings” menu....77
7.3.7. “Language” menu....78
7.3.8. ”Information” view....78
7.3.9. “Default settings” option....78
7.3.10. ”Service menu” option....78
7.3.11. “Quick Access” menu....79
7.4. MENU STRUCTURE....80
8. THE MODBUS PROTOCOL HANDLING....86
8.1. LIST OF REGISTERS....86
8.2. TRANSMISSION ERRORS DESCRIPTION....99
8.3. EXAMPLES OF QUERY/ANSWER FRAMES....100
9. DEFAULT AND USER'S SETTINGS LIST....102

Explanation of symbols used in the manual:

- This symbol denotes especially important guidelines concerning the installation and operation of the device. Not complying with the guidelines denoted by this symbol may cause an accident, damage or equipment destruction.

IF THE DEVICE IS NOT USED ACCORDING TO THE MANUAL THE USER IS RESPONSIBLE FOR POSSIBLE DAMAGES.

- This symbol denotes especially important characteristics of the unit. Read any information regarding this symbol carefully

1. BASIC REQUIREMENTS AND USER SAFETY

- **The manufacturer is not responsible for any damages caused by inappropriate installation, not maintaining the proper environmental conditions and using the unit contrary to its assignment.**
- Installation should be conducted by qualified personnel . During installation all available safety requirements should be considered. The fitter is responsible for executing the installation according to this manual, local safety and EMC regulations.
- If the device is equipped with PE connector, it should be connected to PE wire. Otherwise PE wire should be connected to GND connector.
- The unit must be properly set-up, according to the application. Incorrect configuration can cause defective operation, which can lead to unit damage or an accident.
- **If in the case of a unit malfunction there is a risk of a serious threat to the safety of people or property additional, independent systems and solutions to prevent such a threat must be used.**
- **The unit uses dangerous voltage that can cause a lethal accident. The unit must be switched off and disconnected from the power supply prior to starting installation of troubleshooting (in the case of malfunction).**
- Neighbouring and connected equipment must meet the appropriate standards and regulations concerning safety and be equipped with adequate overvoltage and interference filters.
- **Do not attempt to disassemble, repair or modify the unit yourself. The unit has no user serviceable parts. Defective units must be disconnected and submitted for repairs at an authorized service centre.**

- In order to minimize fire or electric shock hazard, the unit must be protected against atmospheric precipitation and excessive humidity.
- Do not use the unit in areas threatened with excessive shocks, vibrations, dust, humidity, corrosive gasses and oils.
- Do not use the unit in areas where there is risk of explosions.
- Do not use the unit in areas with significant temperature variations, exposure to condensation or ice.
- Do not use the unit in areas exposed to direct sunlight.
- Make sure that the ambient temperature (e.g. inside the control box) does not exceed the recommended values. In such cases forced cooling of the unit must be considered (e.g. by using a ventilator).

The unit is designed for operation in an industrial environment and must not be used in a household environment or similar.

2. GENERAL CHARACTERISTICS

The **ProSens** is an universal meter and controller with legible display and closed in tight housing. It can be find in many industrial applications as a stand-alone device but also, thanks to built-in RS-485 port and Modbus protocol, it can be part of bigger net an cooperate with other devices.

The device can be equipped with (depending on version) up to two universal measurement inputs, one digital sensor input and also up to two control outputs. Each of the universal measurement inputs can be set in current mode (with ranges: 0-20 mA, 4-20 mA), voltage mode (with ranges: 0-10 V, 2-10 V, 0-5 V, 1-5 V, 0-75 mV and 0-150 mV), RTD mode (witch supports: Pt 100/500/1000 sensors) and thermocouple mode (which supports: K, S, J, T, N, R, B, E thermocouples). The digital sensor can measure temperature or temperature and humidity. The relay outputs, the active current outputs, the passive current outputs, the active voltage outputs and many combinations of those outputs can work as a control outputs. The full description of the possibilities is shown further in the instruction.

Temperature of cold ends is compensated automatically. RTD and TC inputs are fully linearised.

The RS-485 communication interface is available as a standard. The device can be ordered only in one power supply version.

3. TECHNICAL DATA

Power supply voltage	11...**24**...36 V DC (for version with voltage output min. 16 V DC)
External fuse (required)	T - type, max. 2 A
Power consumption	max. 2.5 W

Current input (20 mA)	0÷20 mA, 4÷20 mA overload protected, input current is limited to 50 mA (typically)
Current measurement accuracy	± 0.1% @ 25°C; ± one digit (for 0 ÷ 20 mA range)
Current input resistance	< 65 Ω (typical 30 Ω)
Accepted prolonged input overload	+20%

Voltage input (10V range)	0 ÷ 5 V, 1 ÷ 5 V, 0 ÷ 10 V, 2 ÷ 10 V
Voltage measurement accuracy	± 0.1% @ 25°C; ± one digit (for 0 ÷ 10 V range)
Voltage input resistance	> 100 kΩ (while maintaining correct polarization)
Accepted prolonged input overload	+20%

Voltage input (150mV range)	0 ÷ 60 mV, 0 ÷ 75 mV, 0 ÷ 100 mV, 0 ÷ 150 mV
Voltage measurement accuracy	± 0.1% @ 25°C; ± one digit (for 0 ÷ 150 mV range)
Voltage input resistance	> 1,5 MΩ
Accepted prolonged input overload	+20%

RTD input (resistive)	Pt 100, Pt 500,Pt 1000
Measurement range	-100°C ÷ +600°C
Measurement accuracy	± 0,1% @ 25°C; ± one digit
Measurement wires resistance	max. 20 Ω (every wire)

Thermocouple input	K, S, J, T, N, R, B, E
Thermocouple input range	K: -200˚C ÷ +1370˚C S: -50˚C ÷ +1768˚C J: -210˚C ÷ +1200˚C T: -200˚C ÷ + 400˚C N: -200˚C ÷ +1300˚C R: -50˚C ÷ +1768˚C B: +250˚C ÷ +1820˚C E: -200˚C ÷ +1000˚C

Measurement accuracy	K, J, E: ± 0.1% @ 25°C; ± one digit N: ± 0.2% @ 25°C; ± one digit S, T, R, B: ± 0.5% @ 25°C; ± one digit
Accuracy of cold ends temperature compensation	± 1˚C

Digital input sensor	Temperature sensor (**T D**) or Temperature and humidity sensor (**RH D**)
Temperature measurement accuracy	T D: ± 0,5°C for range -10°C ÷ 85°C ± 2°C for range -55°C ÷ 125°C RH D: ± 0,4°C @ 25°C ± 3°C at the ends of the range: -55°C 120°C
Humidity measurement accuracy	RH D: ± 3% RH for range 20 ÷ 80% ± 5% RH at the ends of the range: 0% 100%
Measurement rate	about 4 seconds
Measurement cable maximal length	3 meters

Relay output	0, 1 or 2 NO, 24 V AC / 35 V DC, max 200 mA, overload protected

Active current output	range max. 0 ÷ 24 mA
Load resistance max.	700 Ω

Passive isolated current output	range max. 2.8 ÷ 24 mA
Supply voltage	Us = 9.5 ÷ 36V
Load resistance max.	(Uz – 9, 5 V)/2,8 mA [kΩ]

Active voltage output	range max. 0 ÷ 11V
Load resistance min.	2000 Ω

Temperature stability	50 ppm / °C
Display range	-99999 ÷ 9999, plus decimal point
Communication interface	RS-485, 8N1, Modbus RTU, not separated
Baud rate	1200 bit/s ÷ 115200 bit/s

Display	Graphic LCD, 128 x 64 pixels, highlighted
Data memory	non-volatile memory, EEPROM type
Housing type	panel
Housing material	ASA LURAN
Housing dimensions	120 x 90 x 50 mm
Front panel protection	IP 65 (version with display) IP 67 (version without display)
Operating temperature	-30°C to +80°C – housing and electronics or -30°C to +80°C – LCD and IR
Storage temperature	-30°C to +80°C – housing and electronics -40°C to +80°C – without LCD display
Humidity	5 to 90% no condensation
Screws tightening max. torque	0,5 Nm
Max. connection leads cross section	1.5 mm^2
EMC	according to: PN-EN 61326-1



This is a class A unit. In a residential or a similar area it can cause radio frequency interference. In such cases the user can be requested to use appropriate preventive measures.

4. DEVICE INSTALLATION

The unit has been designed and manufactured in a way assuring a high level of user safety and resistance to interference occurring in a typical industrial environment. In order to take full advantage of these characteristics installation of the unit must be conducted correctly and according to the local regulations.



- Read the basic safety requirements on page **3** prior to starting the installation.
- Ensure that the power supply network voltage corresponds to the nominal voltage stated on the unit's identification label.
- The load must correspond to the requirements listed in the technical data.
- All installation works must be conducted with a disconnected power supply.
- Protecting the power supply connections against unauthorized persons must be taken into consideration.

4.1. UNPACKING

After removing the unit from the protective packaging, check for transportation damage. Any transportation damage must be immediately reported to the carrier. Also, write down the unit serial number located on the housing and report the damage to the manufacturer.

Attached with the unit please find:
- user's manual,
- warranty

4.2. ASSEMBLY

- Disconnect the power supply prior to starting assembly.
- Check the connections are wired correctly prior to switching the unit on.

In order to install the unit, a mounting holes as shown in **Figure 4.1** must be prepared. The back side of the device, which contains mounting holes, must be mounted in earlier prepared mounting holes using screws or bolts.

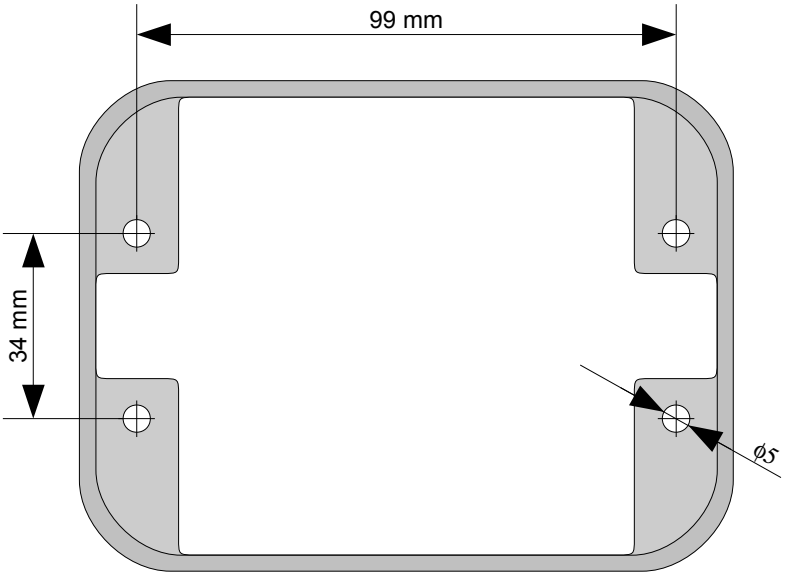

Figure 4.1. Recommended mounting hole dimensions

4.3. CONNECTION METHOD

Caution



- Installation should be conducted by qualified personnel . During installation all available safety requirements should be considered. The fitter is responsible for executing the installation according to this manual, local safety and EMC regulations.

- The unit is not equipped with an internal fuse or power supply circuit breaker. Because of this an external time-delay cut-out fuse with a small nominal current value must be used (recommended bipolar, max. 2A) and a power supply circuit-breaker located near the unit. In the case of using a monopolar fuse it must be mounted on the phase cable (L).

- The power supply network cable diameter must be selected in such a way that in the case of a short circuit of the cable from the side of the unit the cable shall be protected against destruction with an electrical installation fuse.

- Wiring must meet appropriate standards and local regulations and laws.

- In order to secure against accidental short circuit the connection cables must be terminated with appropriate insulated cable tips.

- Tighten the clamping screws. The recommended tightening torque is 0.5 Nm. Loose screws can cause fire or defective operation. Over tightening can lead to damaging the connections inside the units and breaking the thread.

- In the case of the unit being fitted with separable clamps they should be inserted into appropriate connectors in the unit, even if they are not used for any connections.

- Unused terminals (marked as n.c.) must not be used for connecting any connecting cables (e.g. as bridges), because this can cause damage to the equipment or electric shock.

- If the unit is equipped with housing, covers and sealing to, protecting against water intrusion, pay special attention to their correct tightening or clamping. In the case of any doubt consider using additional preventive measures (covers, roofing, seals, etc.). Carelessly executed assembly can increase the risk of electric shock.

- After the installation is completed do not touch the unit's connections when it is switched on, because it carries the risk of electrical shock.

Due to possible significant interference in industrial installations appropriate measures assuring correct operation of the unit must be applied. To avoid the unit of improper indications keep recommendations listed below.

– Avoid running signal cables and transmission cables together with power supply cables and cables controlling inductive loads (e.g. contactors). Such cables should cross at a right angle.

– Contactor coils and inductive loads should be equipped with interference protection systems, e.g. RC-type.

– Use of screened signal cables is recommended. Signal cable screens should be connected to the earthing only at one of the ends of the screened cable.

– In the case of magnetically induced interference the use of twisted pair of signal cables is recommended. Twisted pair (best if shielded) must be used with RS-485 serial transmission connections.

– In the case of measurement or control signals are longer than 30m or go outside of the building then additional safety circuits are required.

– In the case of interference from the power supply side the use of appropriate interference filters is recommended. Bear in mind that the connection between the filter and the unit should be as short as possible and the metal housing of the filter must be connected to the earth with the largest possible surface. The cables connected to the filter output must not be run with cables with interference (e.g. circuits controlling relays or contactors).

Connections of power supply voltage and measurement signals are executed using the screw connections on the back of the unit's housing.

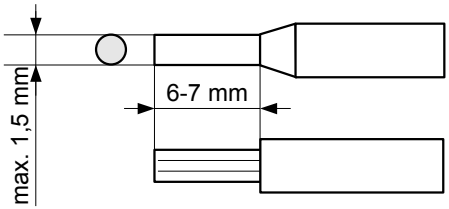

Figure 4.2. Method of cable insulation replacing and cable terminals

All connections must be made while power supply is disconnected !

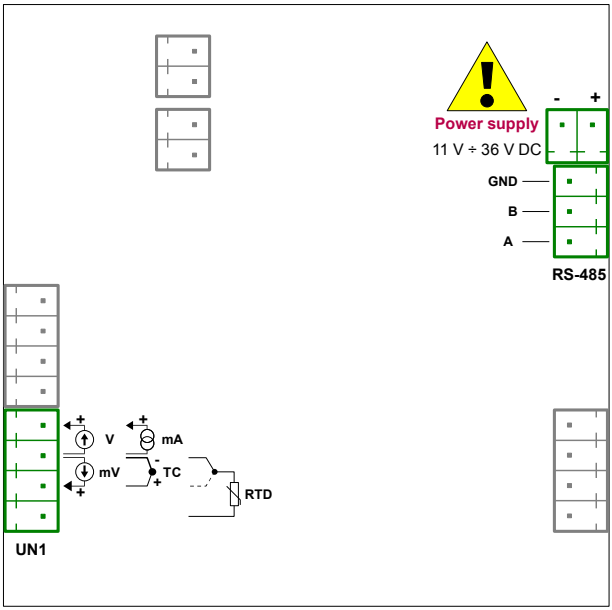

Figure 4.3. Terminals description (one universal input)

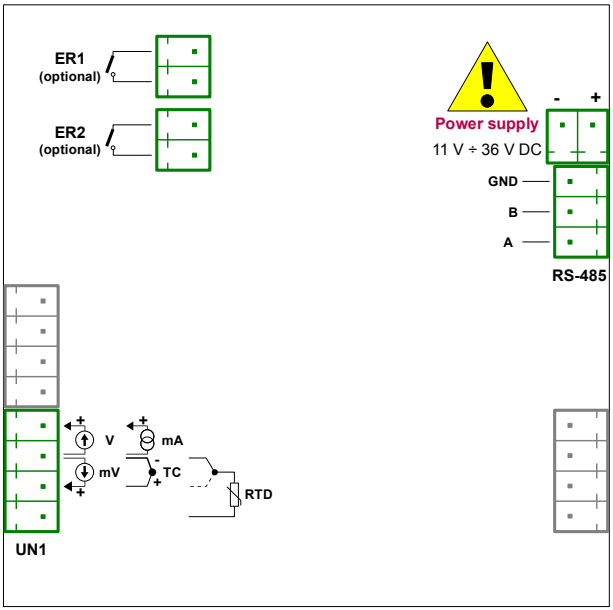

Figure 4.4. Terminals description (one universal input and two relay outputs)

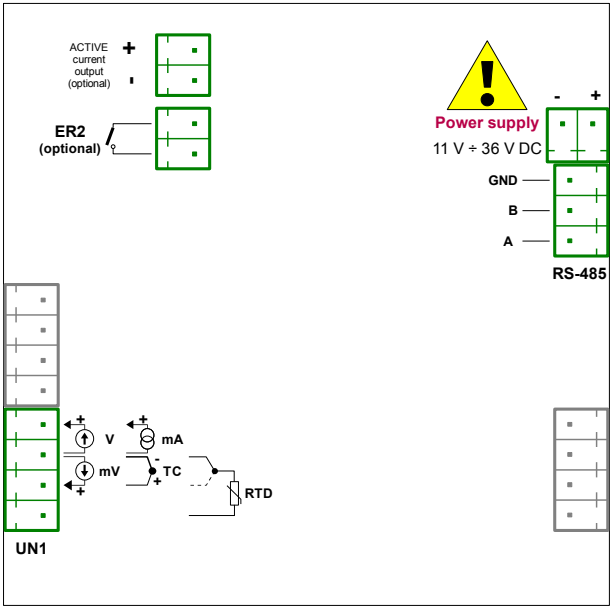

Figure 4.5. Terminals description (one universal input, one relay output and one active current output)

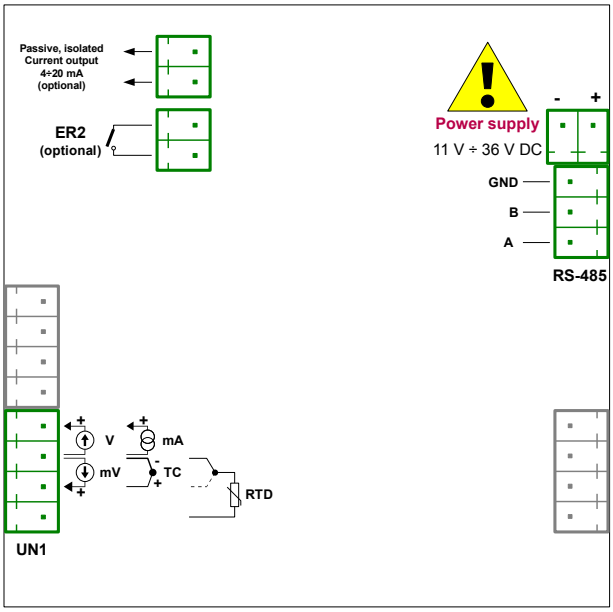

Figure 4.6. Terminals description (one universal input, one relay output and one passive current output)

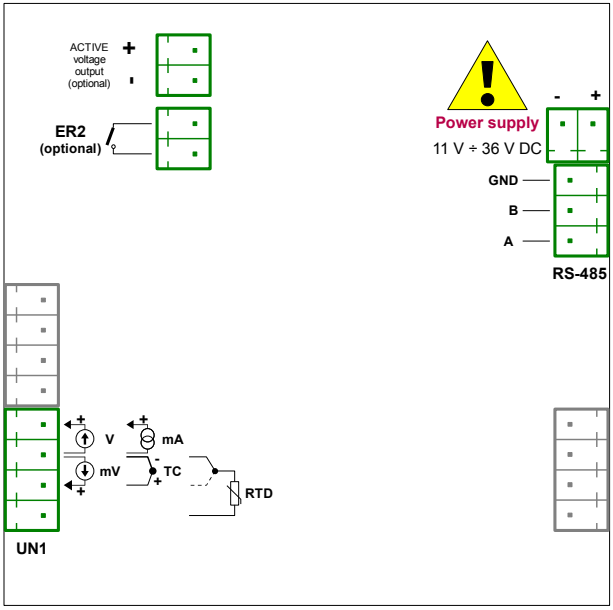

Figure 4.7. Terminals description (one universal input, one relay output and one active voltage output)

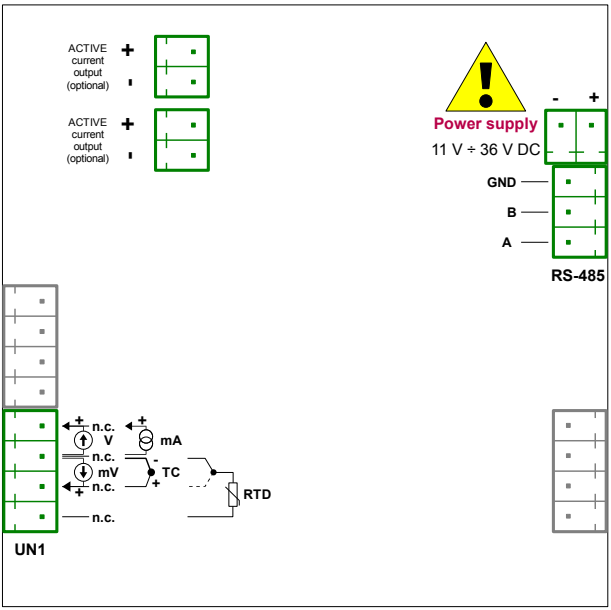

Figure 4.8. Terminals description (one universal input and two active current outputs)

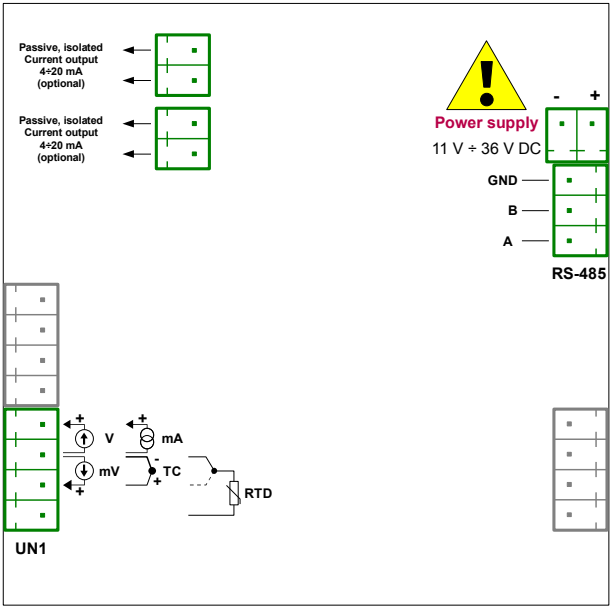

Figure 4.9. Terminals description (one universal input and two passive current outputs)

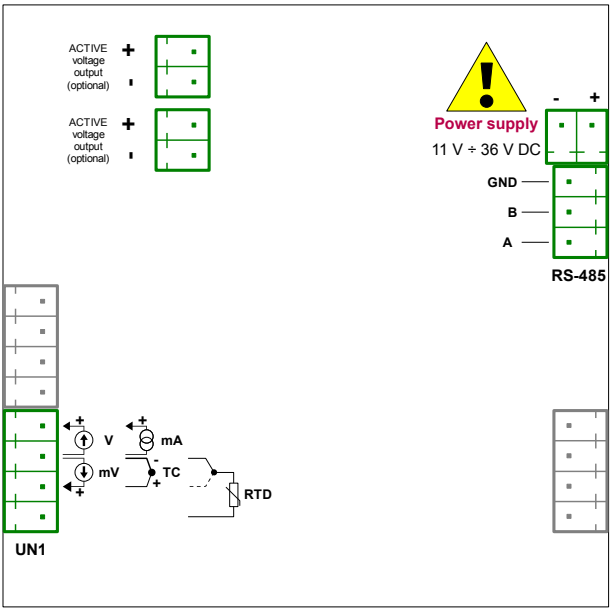

Figure 4.10. Terminals description (one universal input and two active voltage outputs)

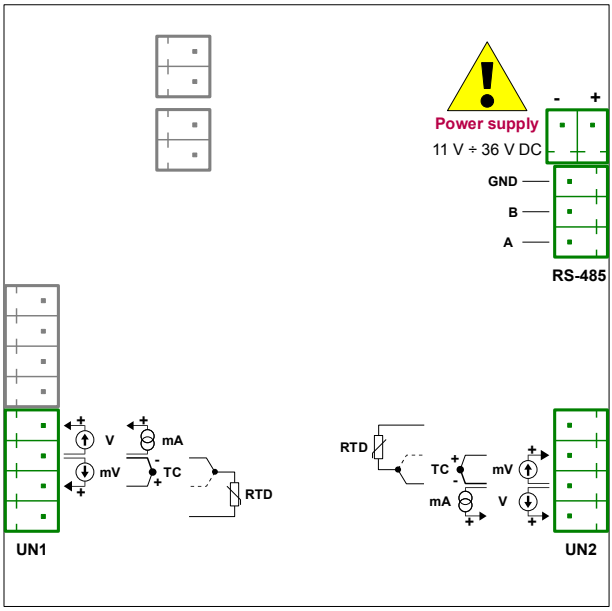

Figure 4.11. Terminals description (two universal inputs)

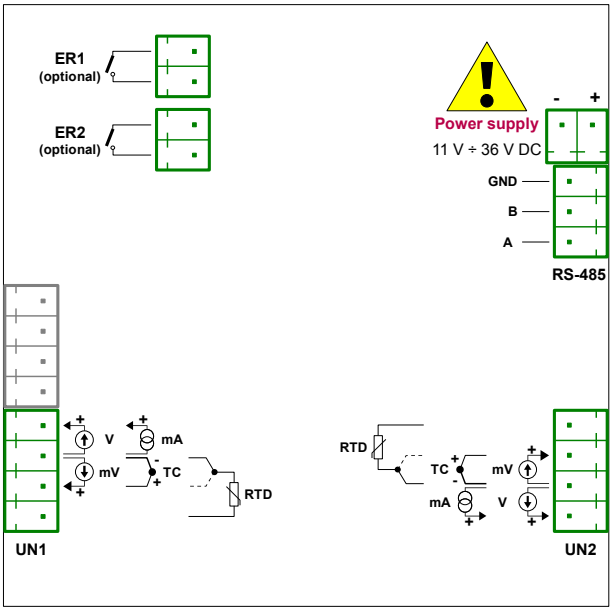

Figure 4.12. Terminals description (two universal inputs and two relay outputs)

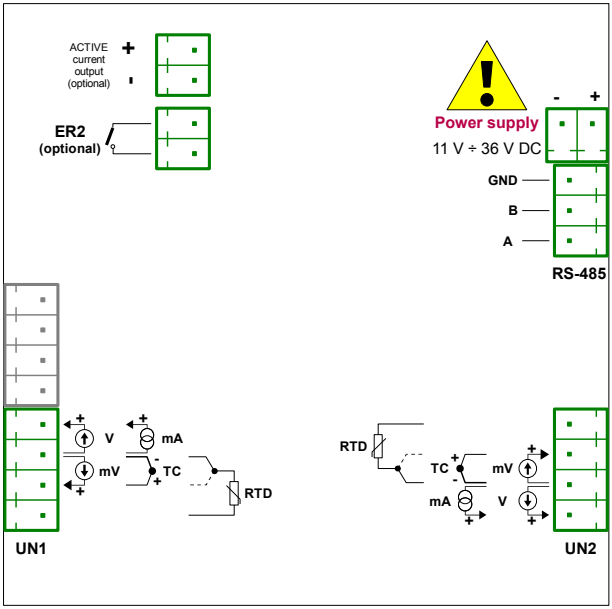

Figure 4.13. Terminals description (two universal inputs, one relay output and one active current output)

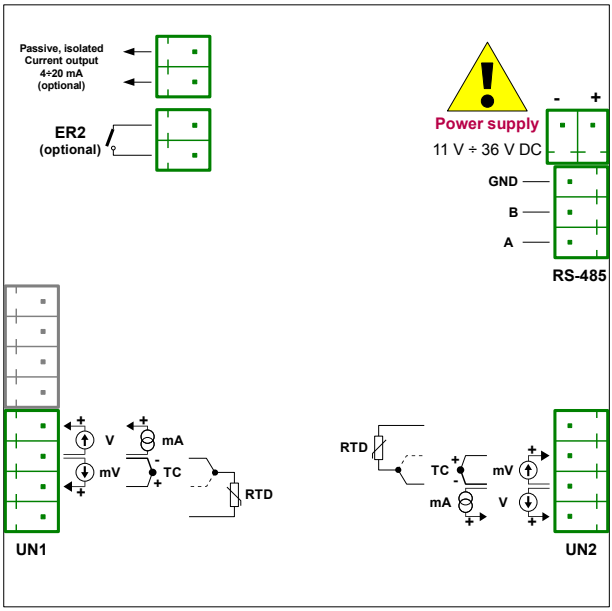

Figure 4.14. Terminals description (two universal inputs, one relay output and one passive current output)

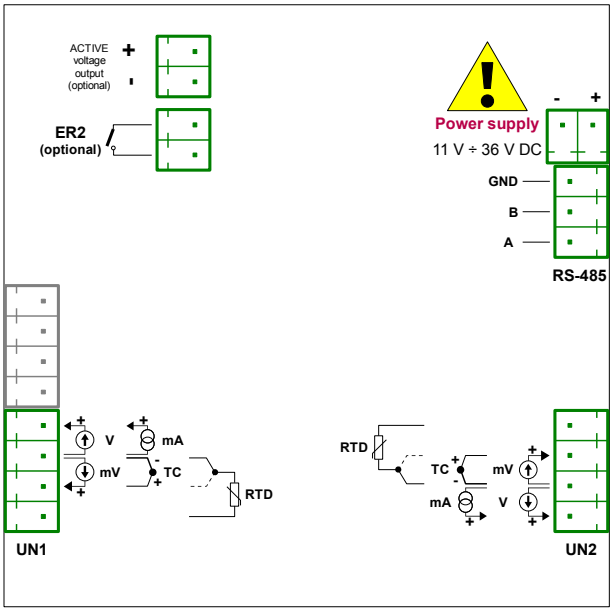

Figure 4.15. Terminals description (two universal inputs, one relay output and one active voltage output)

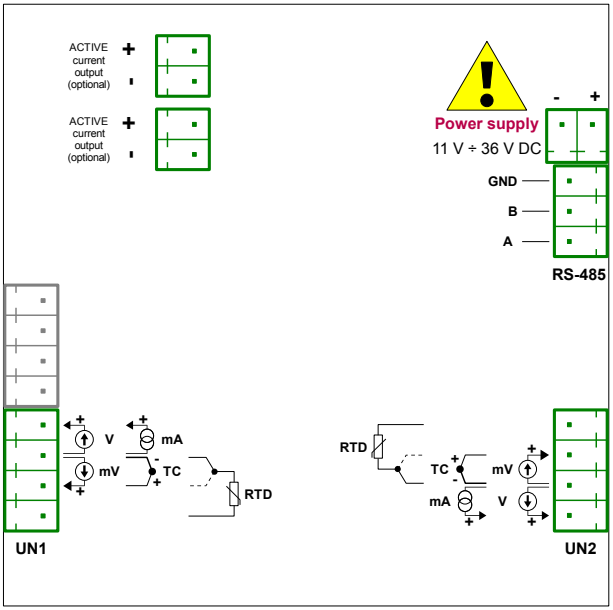

Figure 4.16. Terminals description (two universal inputs, and two active current outputs)

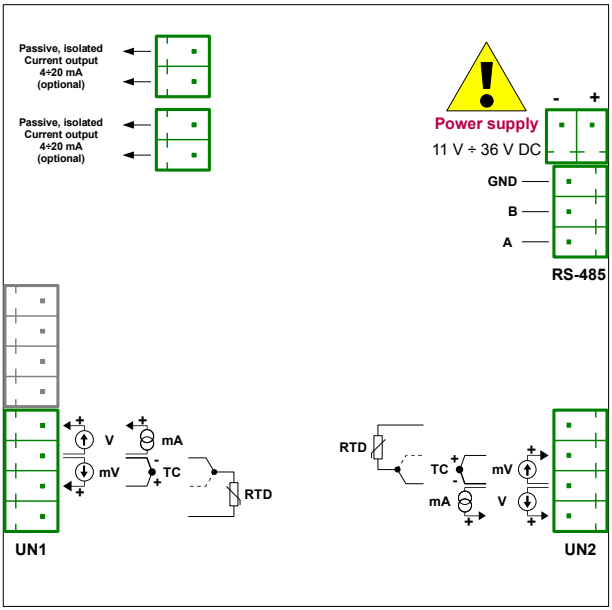

Figure 4.17. Terminals description (two universal inputs, and two passive current outputs)

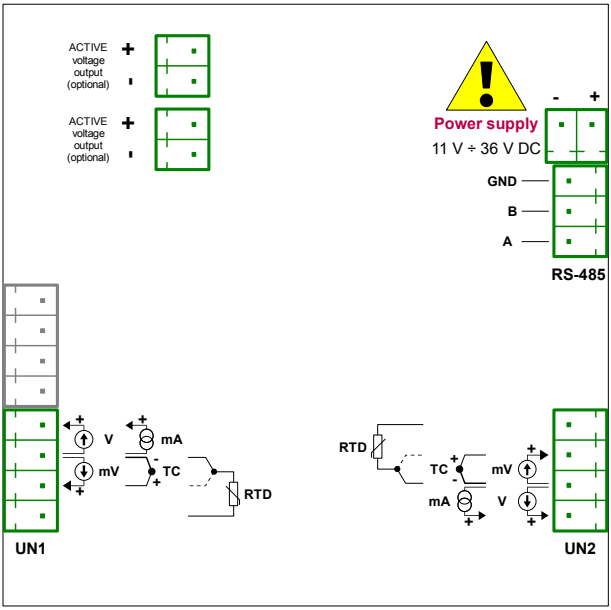

Figure 4.18. Terminals description (two universal inputs, and two active voltage outputs)

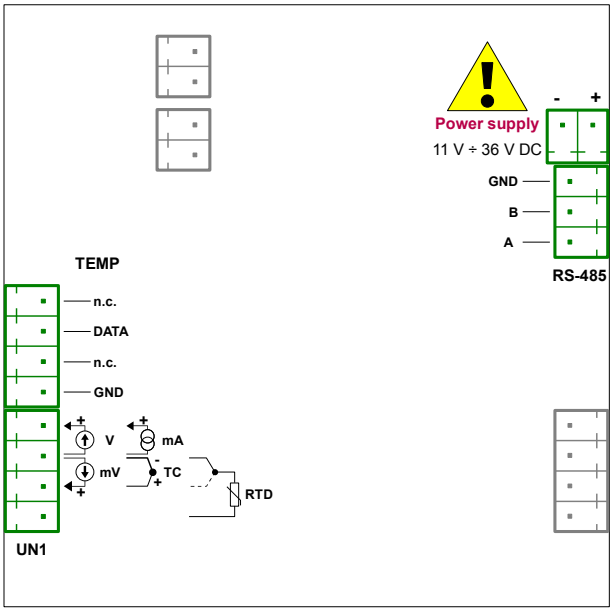

Figure 4.19. Terminals description (one universal input and one temperature digital sensor input)

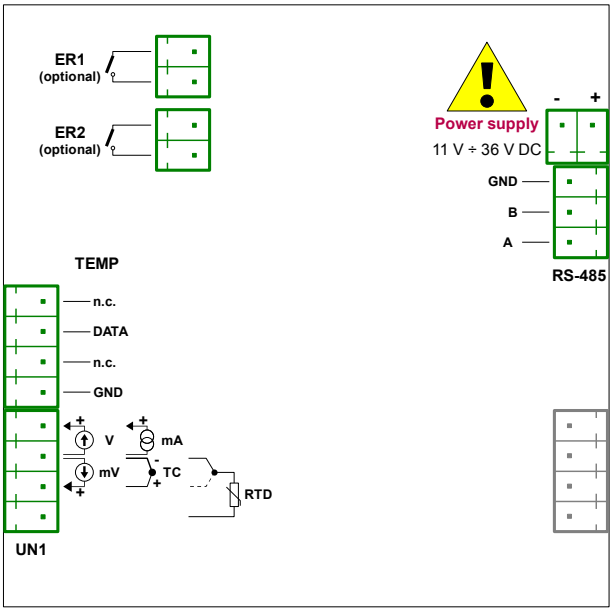

Figure 4.20. Terminals description (one universal input, one temperature digital sensor input and two relay outputs)

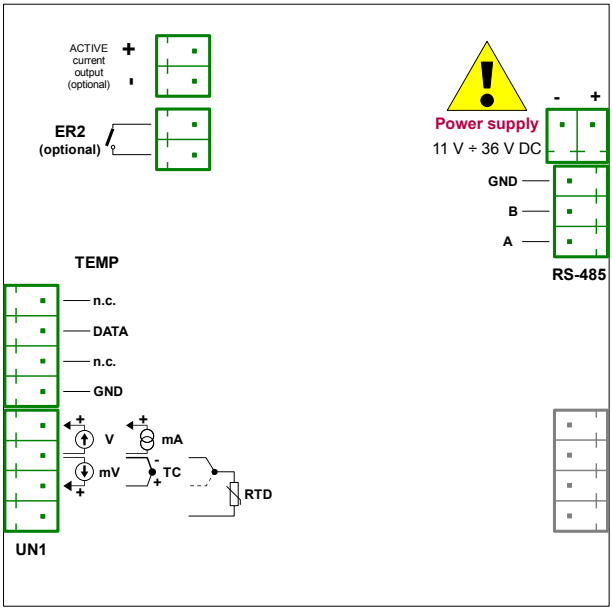

Figure 4.21. Terminals description (one universal input, one temperature digital sensor input, one relay output and one active current output)

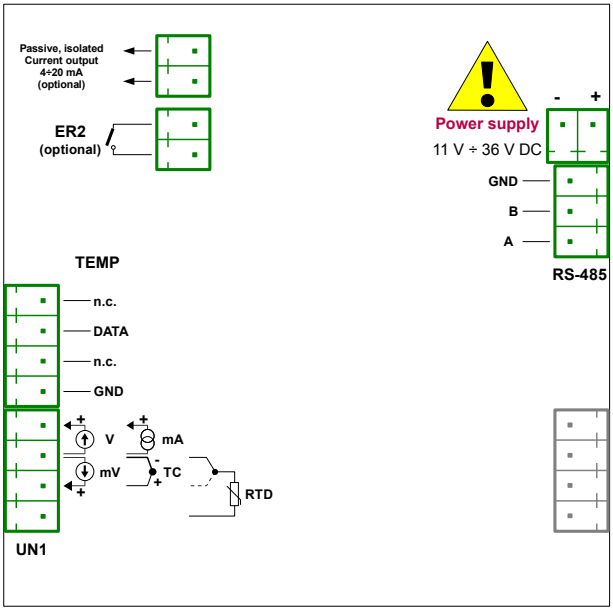

Figure 4.22. Terminals description (one universal input, one temperature digital sensor input, one relay output and one passive current output)

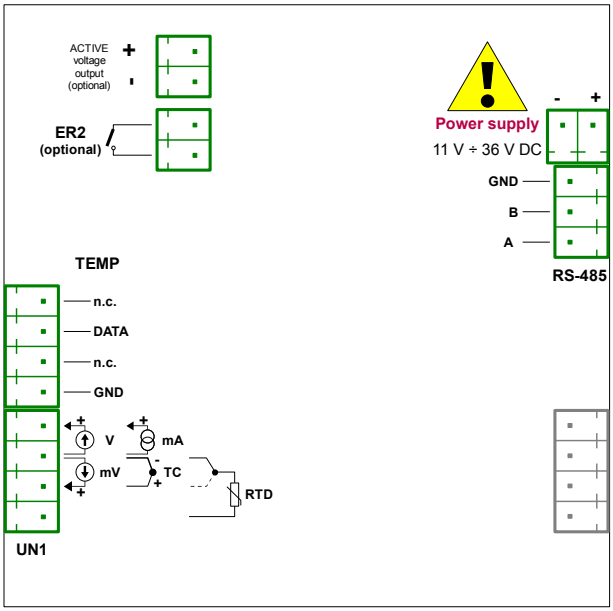

Figure 4.23. Terminals description (one universal input, one temperature digital sensor input, one relay output and one active voltage output)

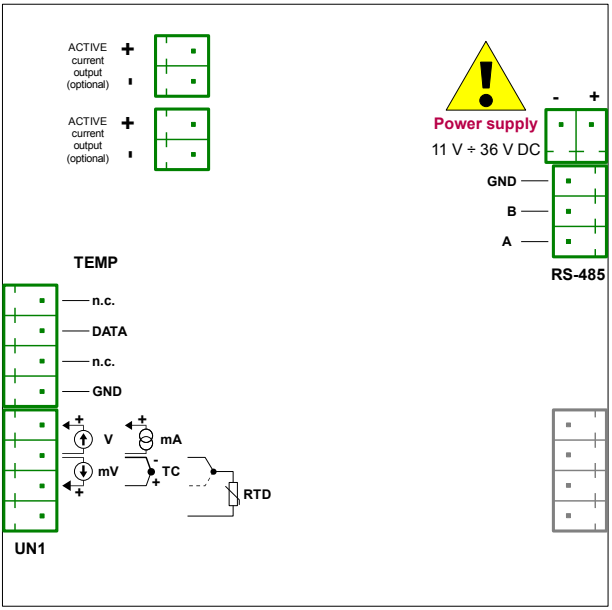

Figure 4.24. Terminals description (one universal input, one temperature digital sensor input and two active current outputs)

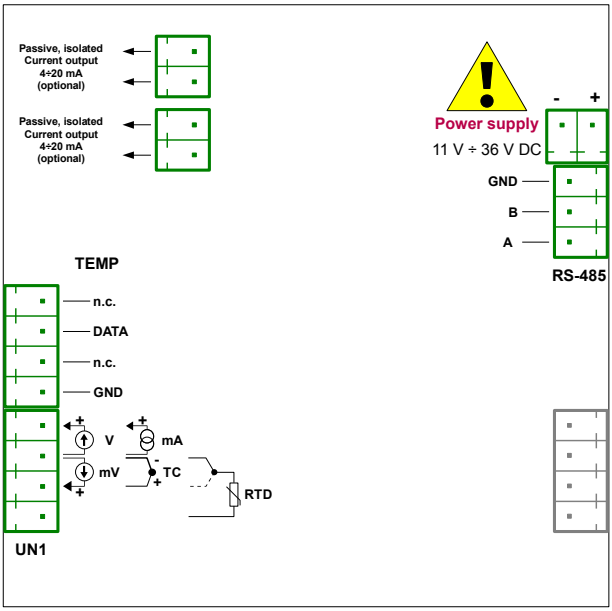

Figure 4.25. Terminals description (one universal input, one temperature digital sensor input and two passive current outputs)

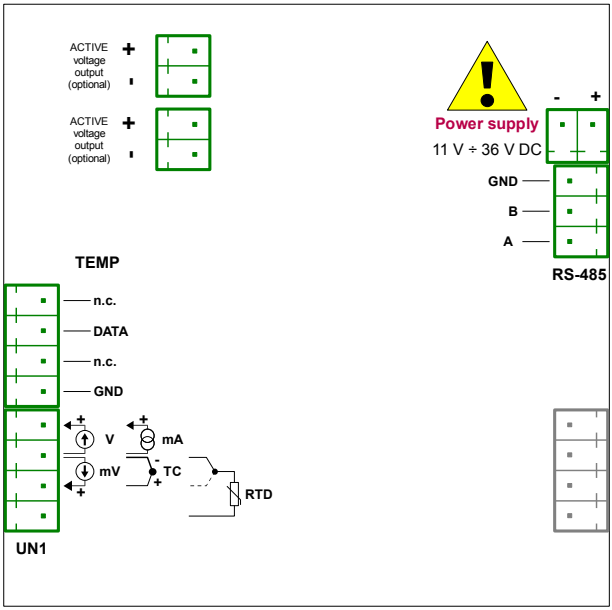

Figure 4.26. Terminals description (one universal input, one temperature digital sensor input and two active voltage outputs)

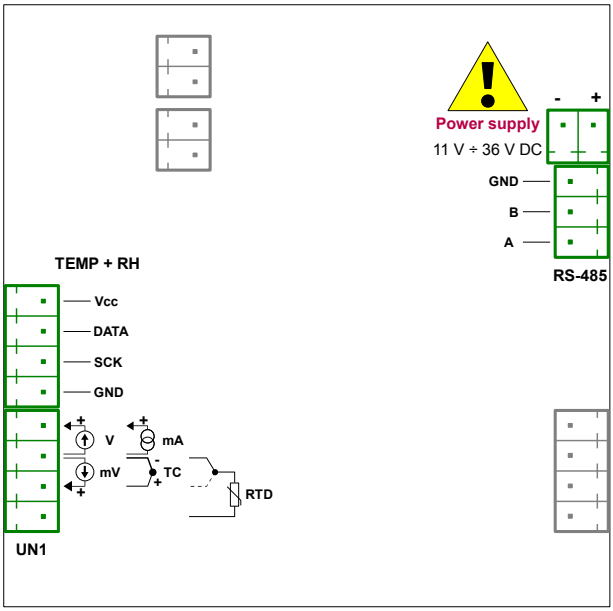

Figure 4.27. Terminals description (one universal input and one temperature and humidity digital sensor input)

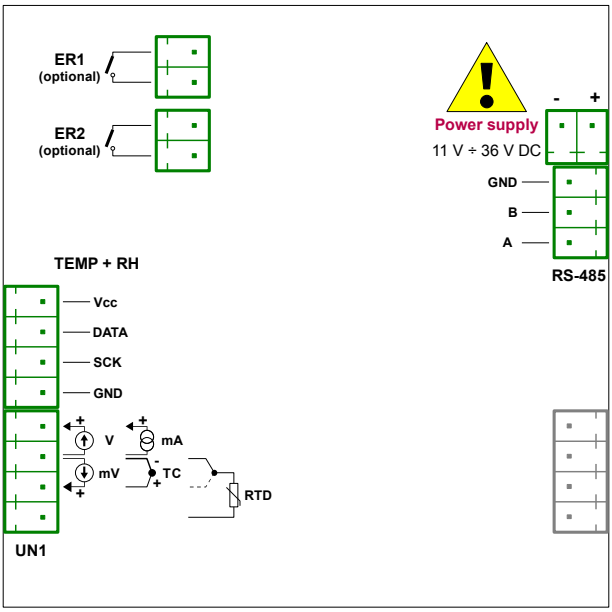

Figure 4.28. Terminals description (one universal input, one temperature and humidity digital sensor input and two relay outputs)

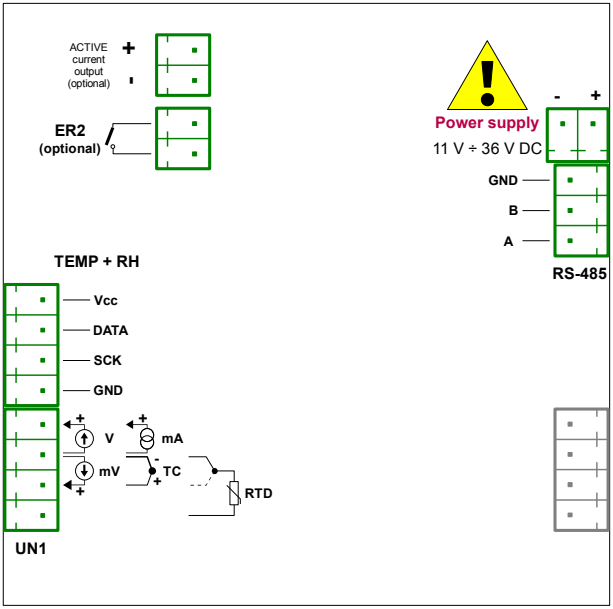

Figure 4.29. Terminals description (one universal input, one temperature and humidity digital sensor input, one relay output and one active current output)

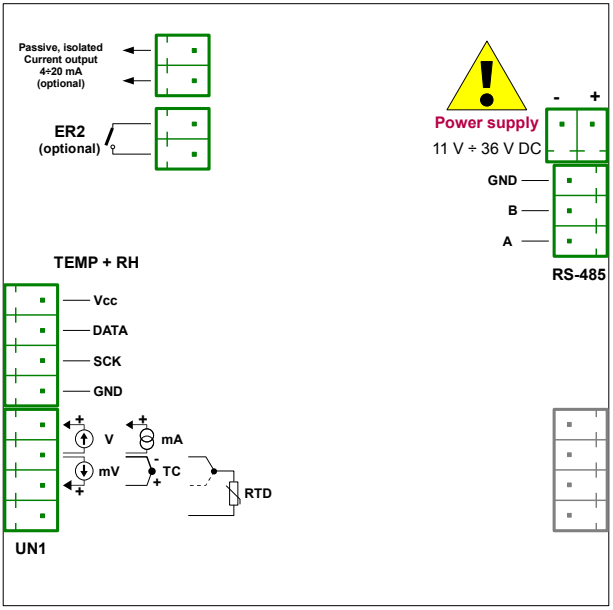

Figure 4.30. Terminals description (one universal input, one temperature and humidity digital sensor input, one relay output and one passive current output)

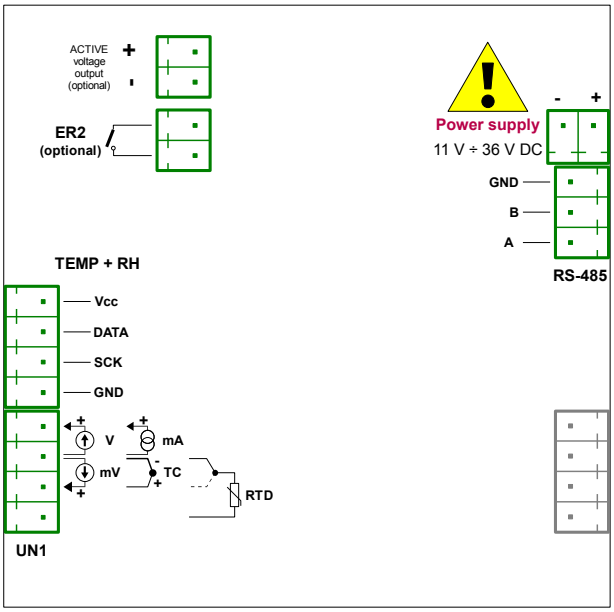

Figure 4.31. Terminals description (one universal input, one temperature and humidity digital sensor input, one relay output and one active voltage output)

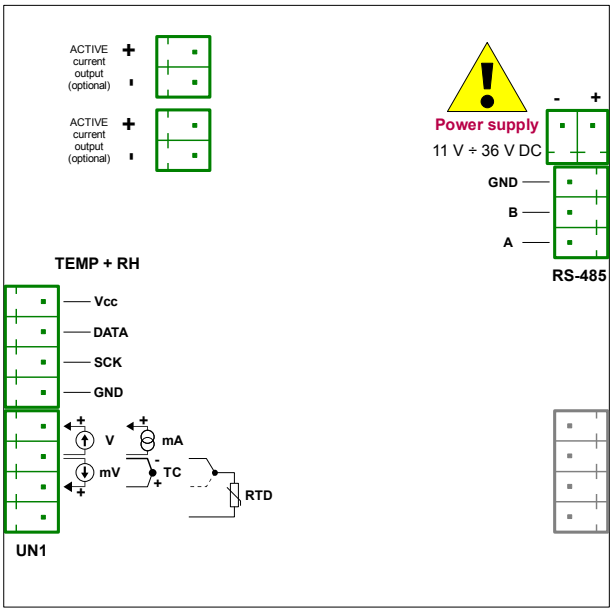

Figure 4.32. Terminals description (one universal input, one temperature and humidity digital sensor input and two active current outputs)

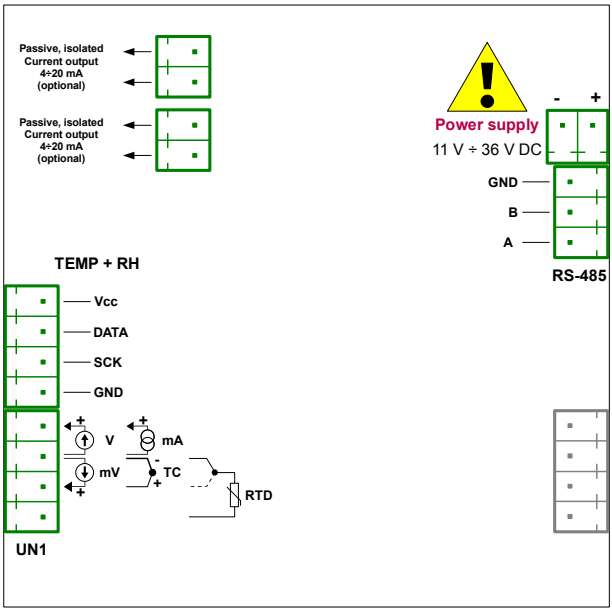

Figure 4.33. Terminals description (one universal input, one temperature and humidity digital sensor input and two passive current outputs)

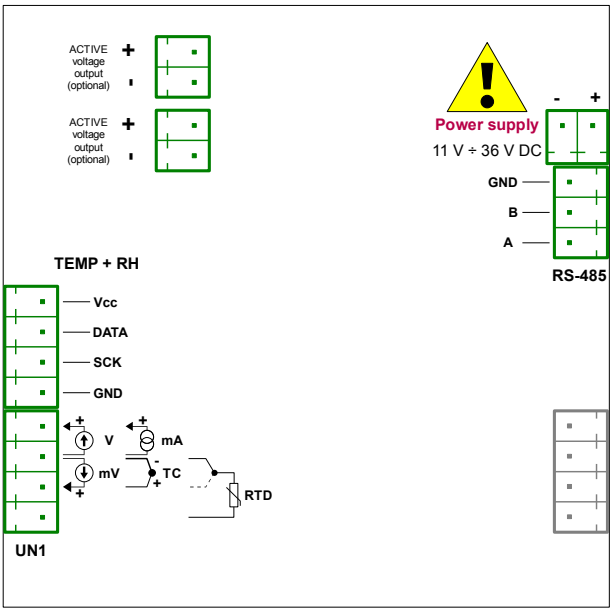

Figure 4.34. Terminals description (one universal input, one temperature and humidity digital sensor input and two active voltage outputs)

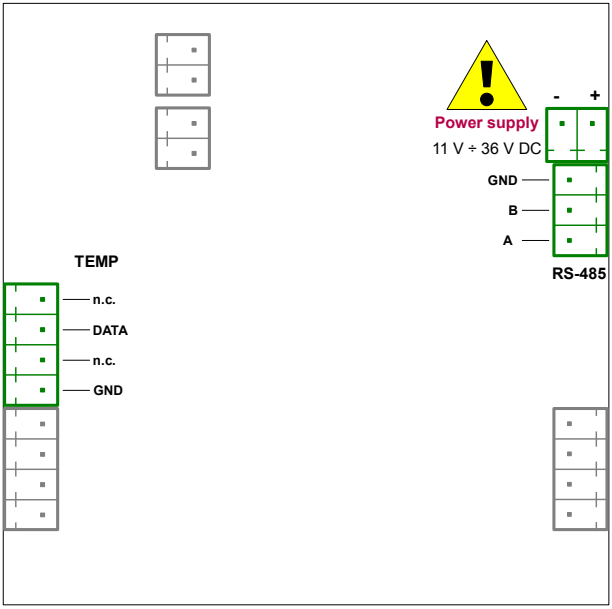

Figure 4.35. Terminals description (one temperature digital sensor input)

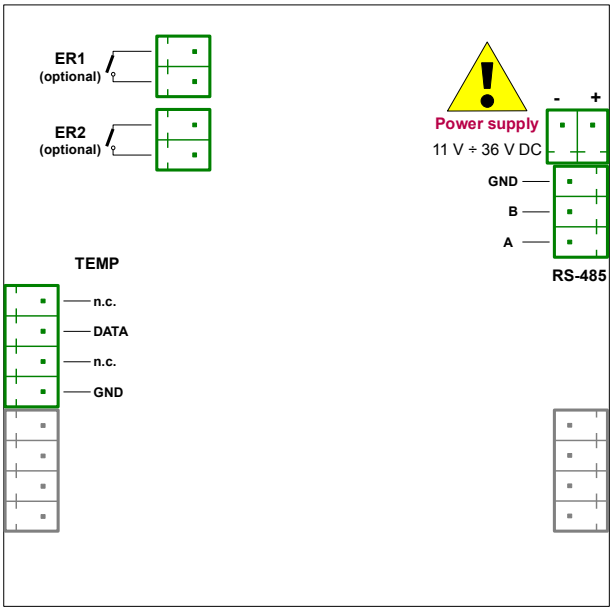

Figure 4.36. Terminals description (one temperature digital sensor input and two relay outputs)

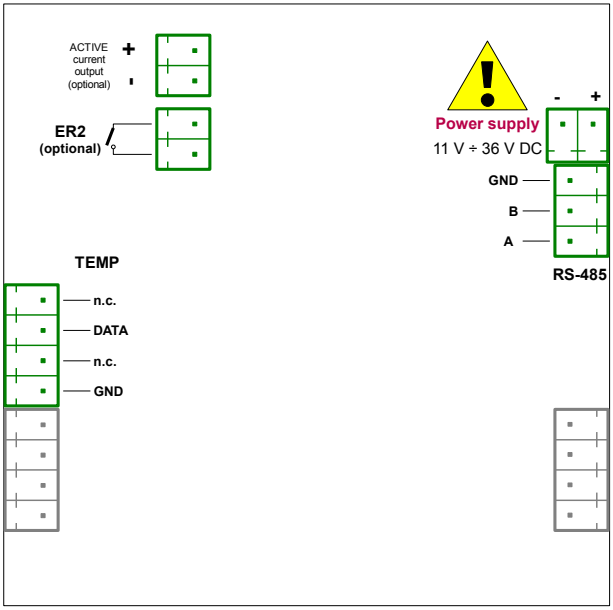

Figure 4.37. Terminals description (one temperature digital sensor input, one relay output and one active current output)

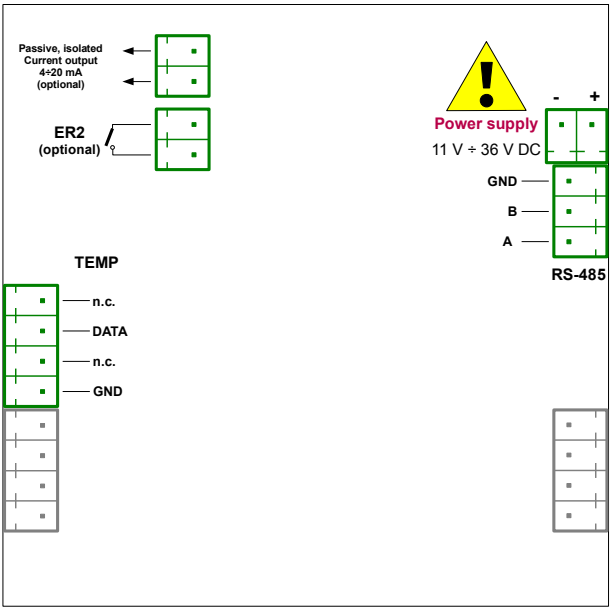

Figure 4.38. Terminals description (one temperature digital sensor input, one relay output and one passive current output)

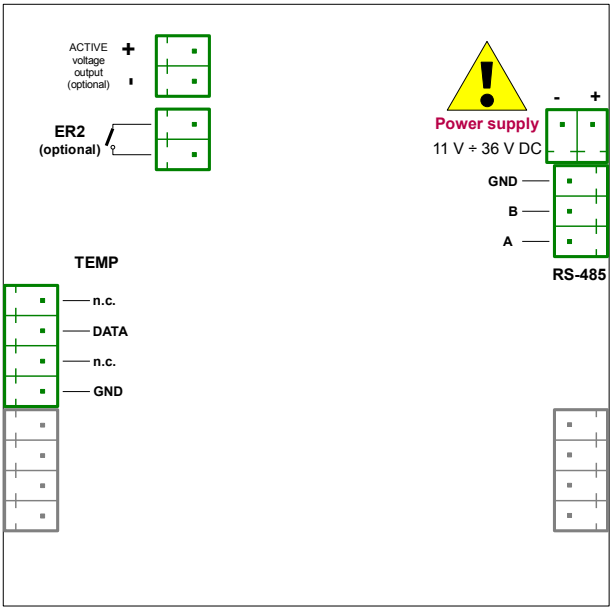

Figure 4.39. Terminals description (one temperature digital sensor input, one relay output and one active voltage output)

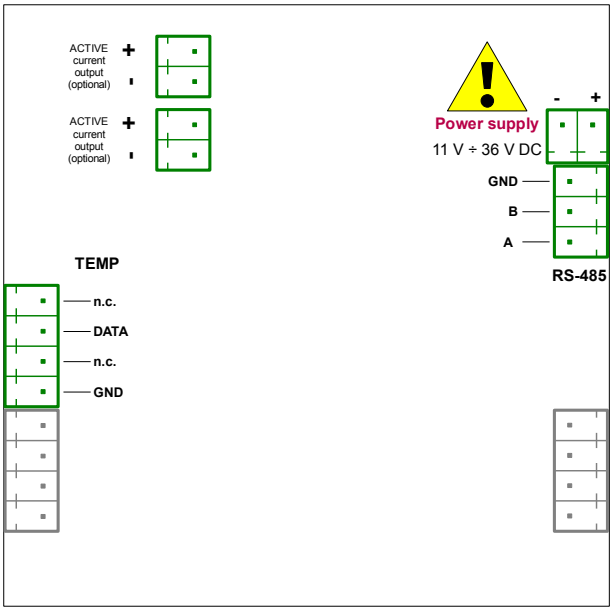

Figure 4.40. Terminals description (one temperature digital sensor input and two active current outputs)

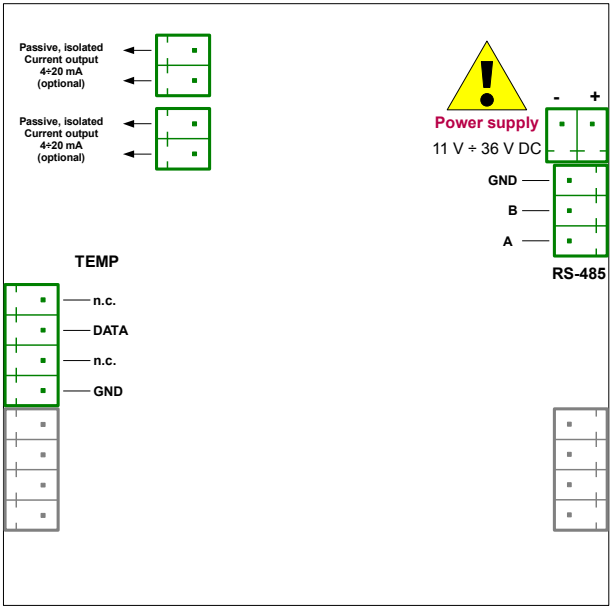

Figure 4.41. Terminals description (one temperature digital sensor input and two passive current outputs)

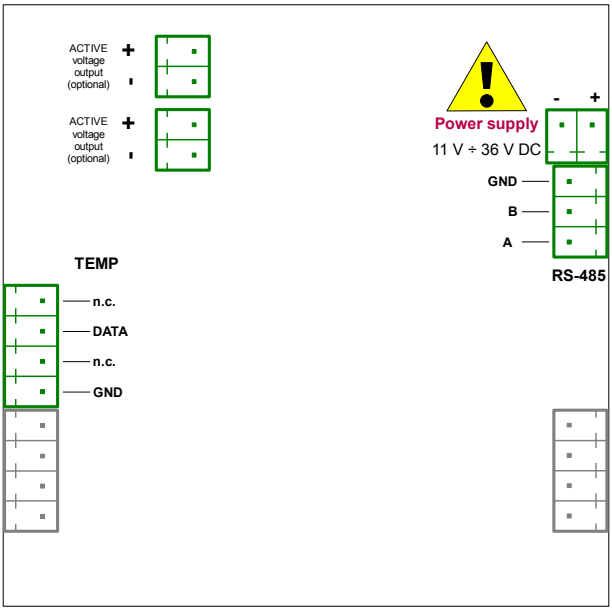

Figure 4.42. Terminals description (one temperature digital sensor input and two active voltage outputs)

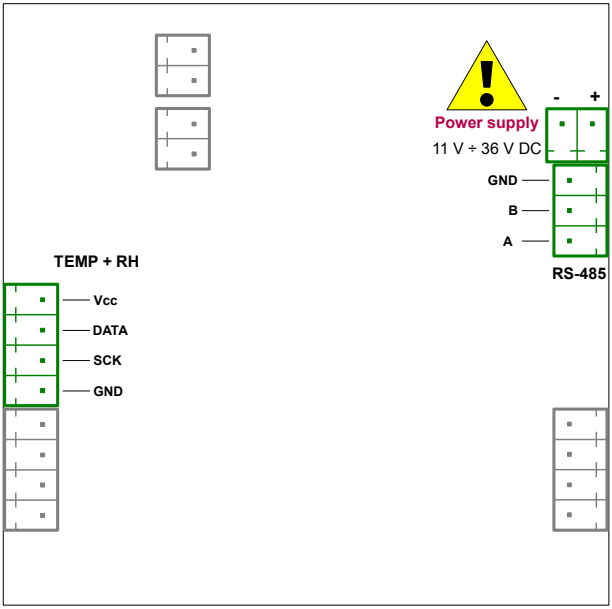

Figure 4.43. Terminals description (one temperature and humidity digital sensor input)

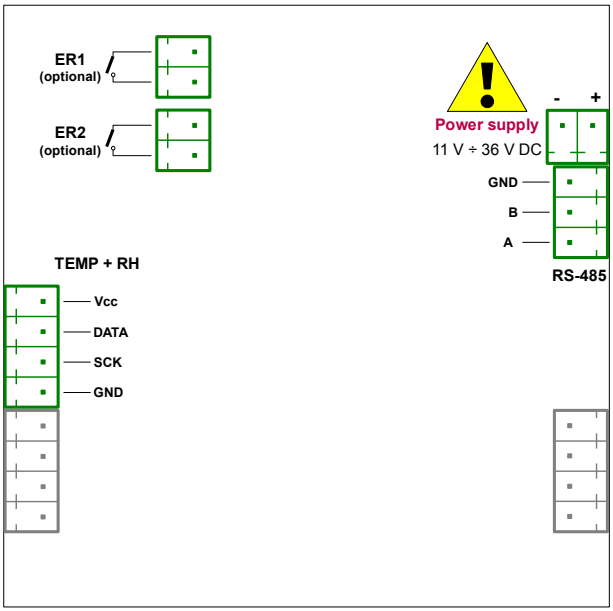

Figure 4.44. Terminals description (one temperature and humidity digital sensor input and two relay outputs)

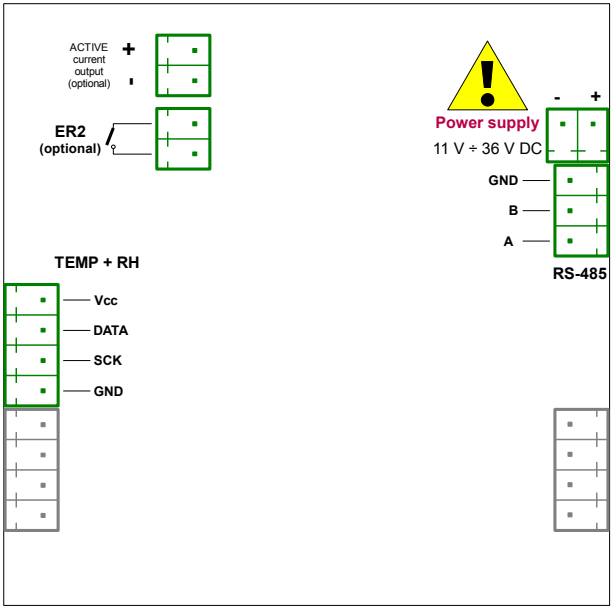

Figure 4.45. Terminals description (one temperature and humidity digital sensor input, one relay output and active current output)

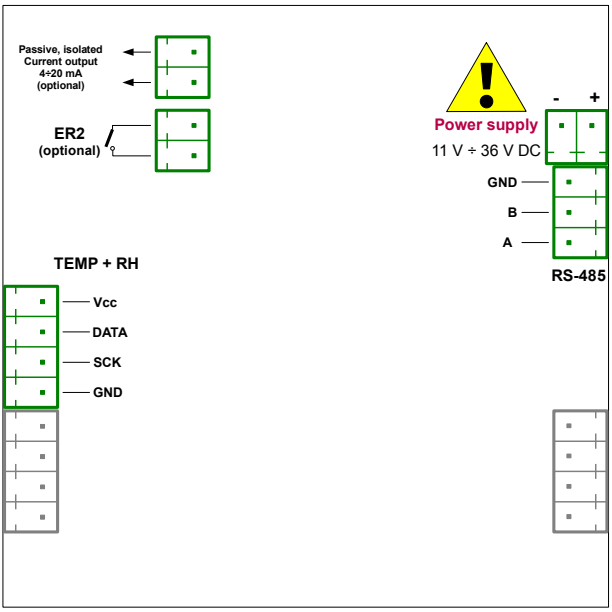

Figure 4.46. Terminals description (one temperature and humidity digital sensor input, one relay output and passive current output)

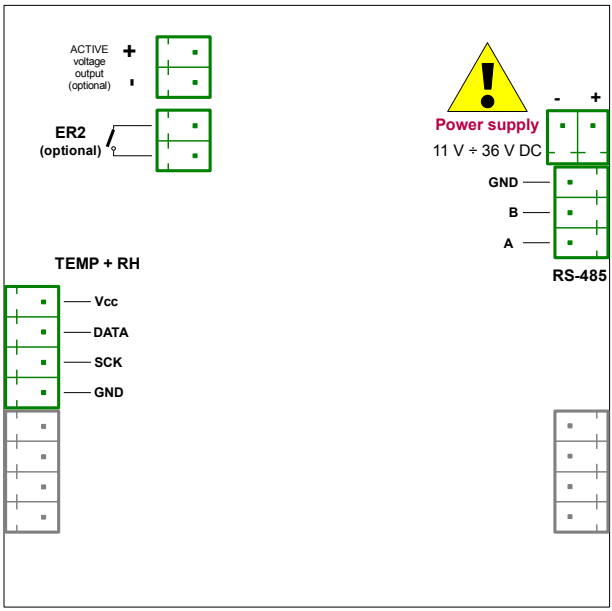

Figure 4.47. Terminals description (one temperature and humidity digital sensor input, one relay output and active voltage output)

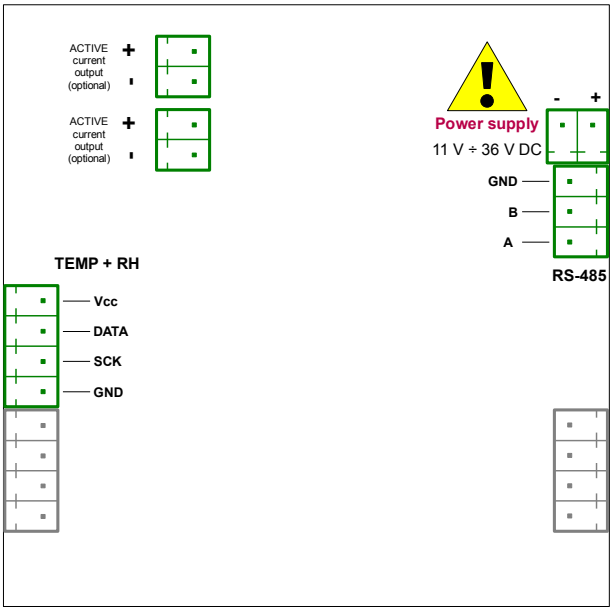

Figure 4.48. Terminals description (one temperature and humidity digital sensor input and two active current outputs)

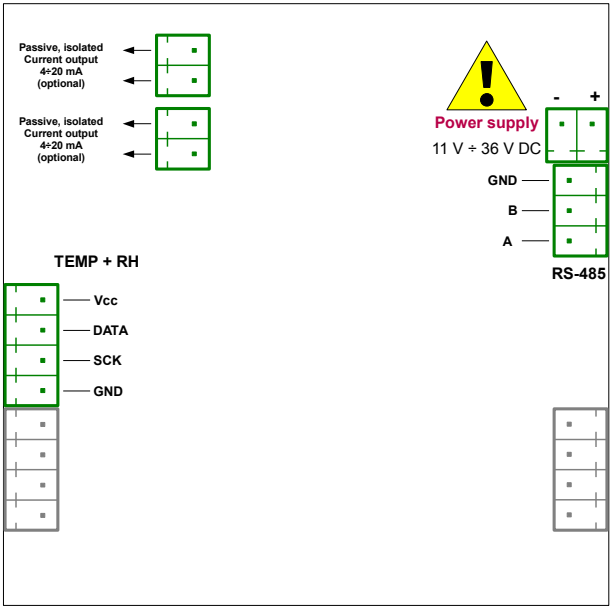

Figure 4.49. Terminals description (one temperature and humidity digital sensor input and two passive current outputs)

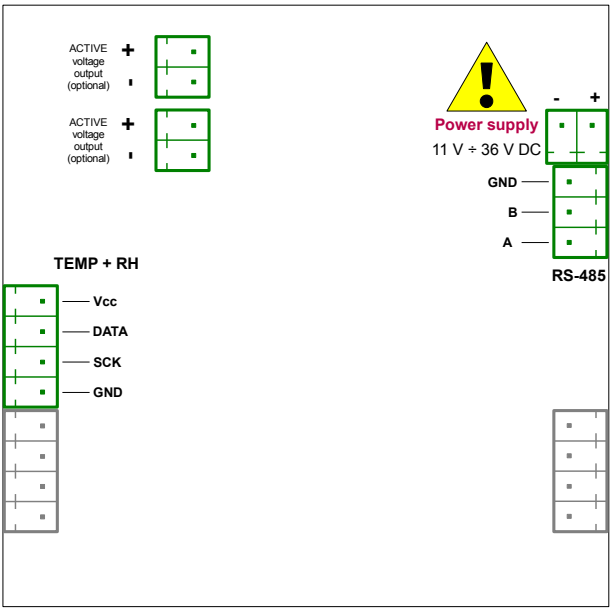

Figure 4.50. Terminals description (one temperature and humidity digital sensor input and two active voltage outputs)

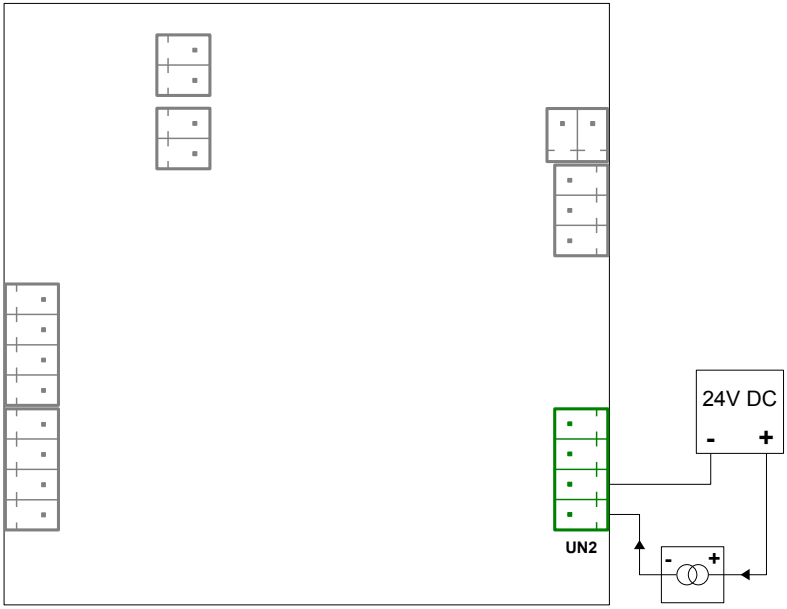

Figure 4.51. Connection of 2-wire current converters

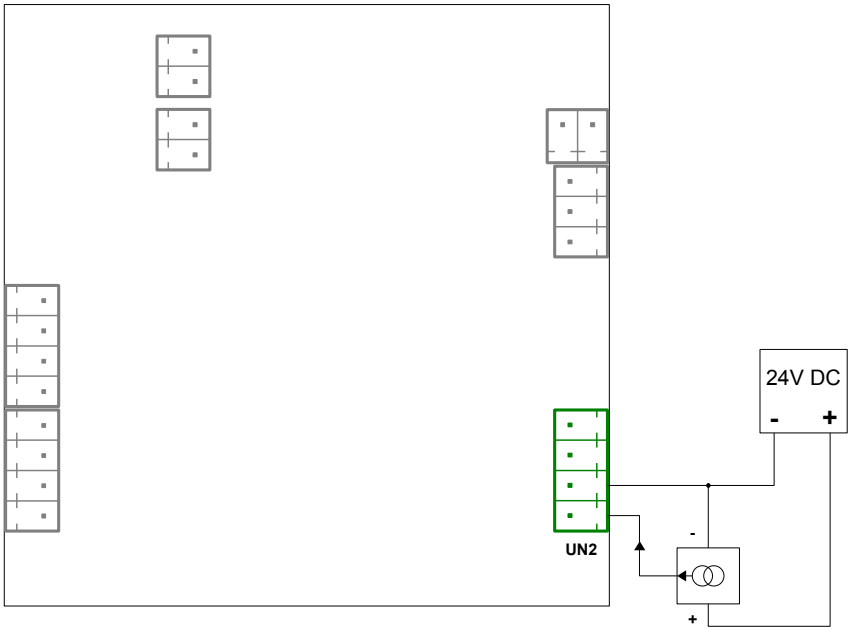

Figure 4.52. Connection of 3-wire current converters

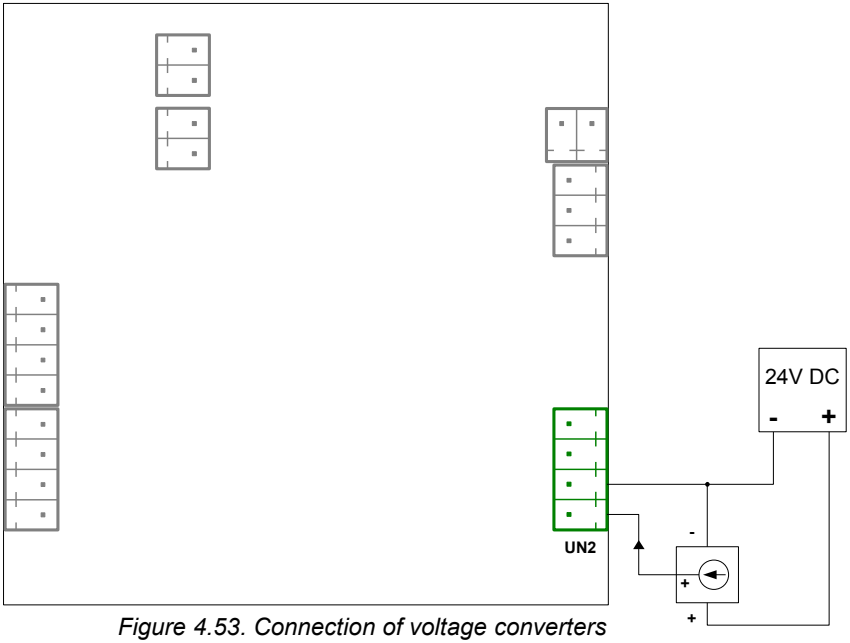

Figure 4.53. Connection of voltage converters

Temperature sensor can be connected to the device in typical 3-wire circuit (**Figure 4.53**) or 2-wire circuit (**Figure 4.54**). Due to precision of measurement 3-wire circuit is recommended.

If 2 wire circuit is used, the resistance of wires should be as small as possible, to avoid of measurement errors. Measured value can be corrected (constant correction) using "**Offset**" parameter from menu "**Inputs**". Due to low precision 2-wire connection is not recommended.

When 2-wires connection is used, the resistance of particular wires (Ra and Rc) **CAN BE DIFFERENT**. When 3-wires connection is used, the resistance of particular wires (Ra ÷ Rc) **MUST BE IDENTICAL** to enable proper compensation of it's resistance. The resistance of particular wire **should not be greater than 20 Ω.**

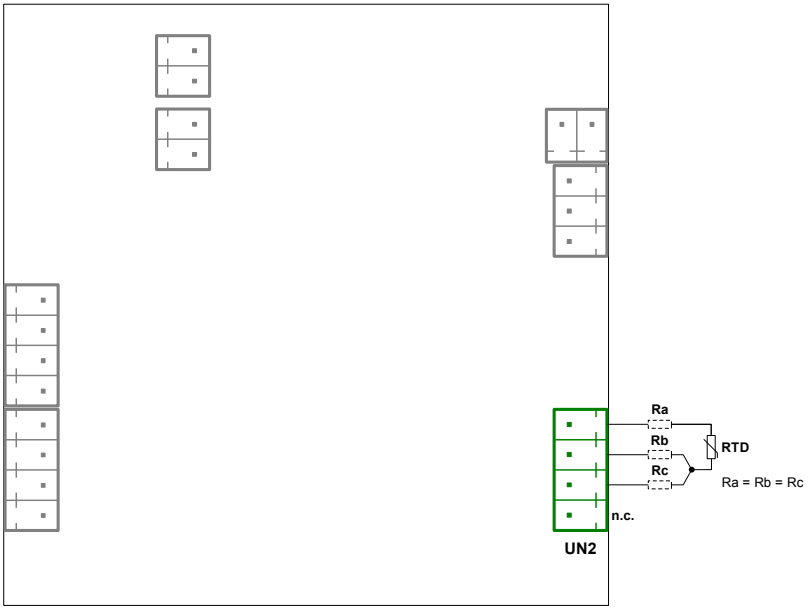

Figure 4.54. Connection of RTD sensors 3-wires circuit

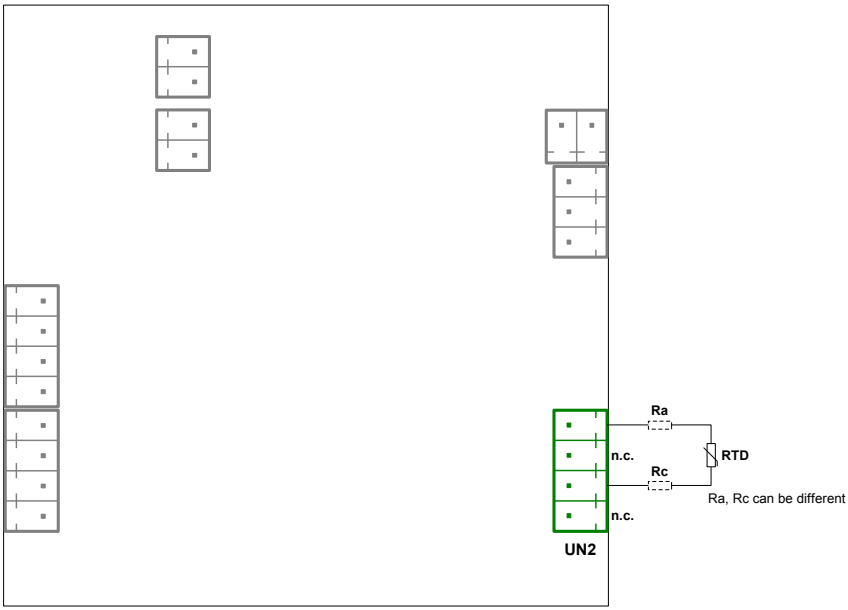

Figure 4.55. Connection of RTD sensors 2-wires circuit

The connection circuit should not be changed while unit is powered. While using TC, RTD or voltage inputs (0-150 mV) the device is able to detect wire breaks. Wire breaks are detected within about 2 seconds. During detection measurements will be incorrect. If wire break is detected “-- SErr --” (sensor error) message is displayed.

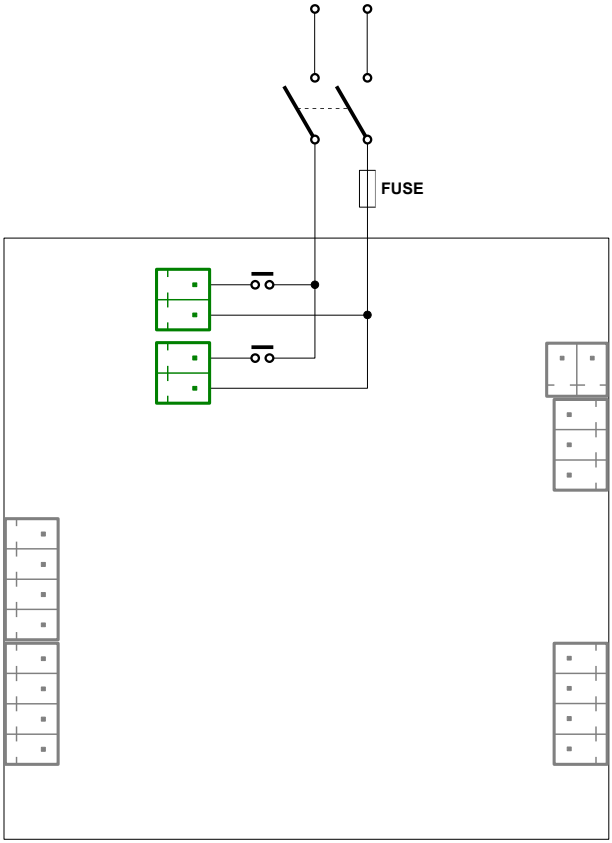

Figure 4.56. Connection of relays

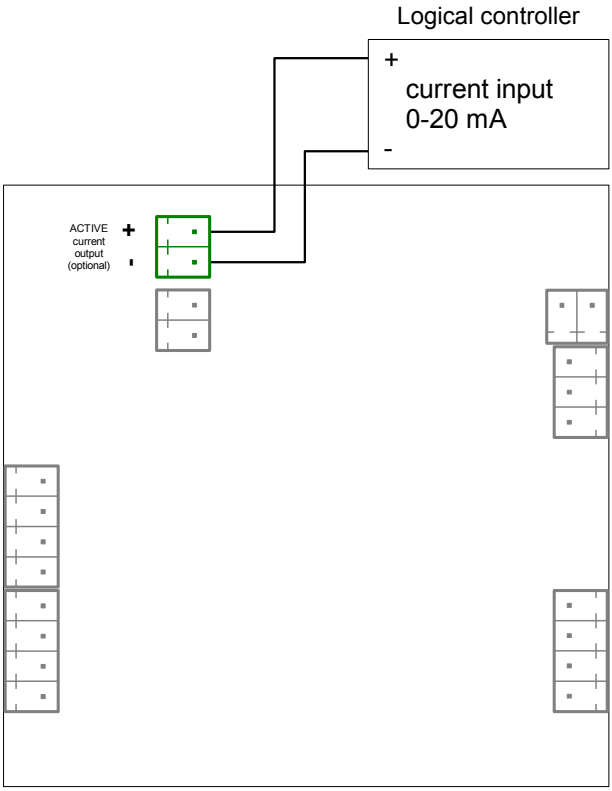

Figure 4.57. Example of active current outputs connection (for device with active current output only)

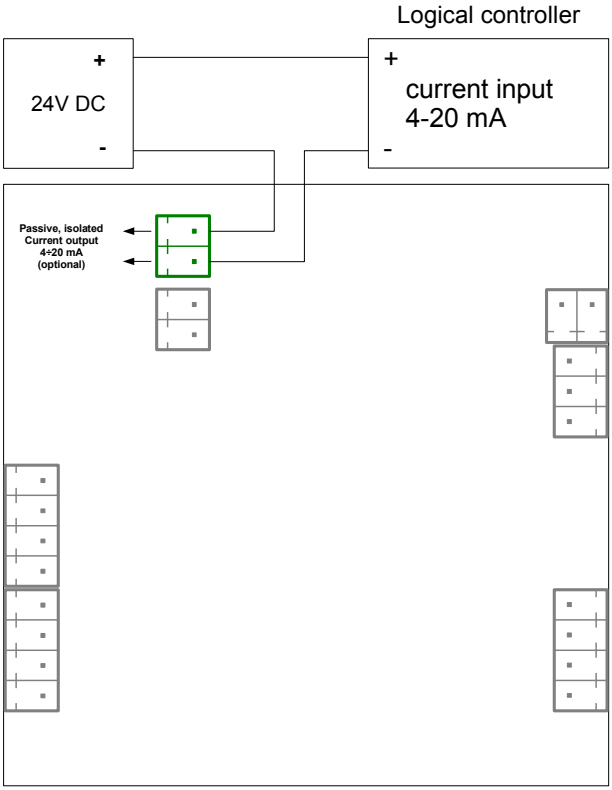

Figure 4.58. Example of passive current outputs connection (for device with passive current output only)

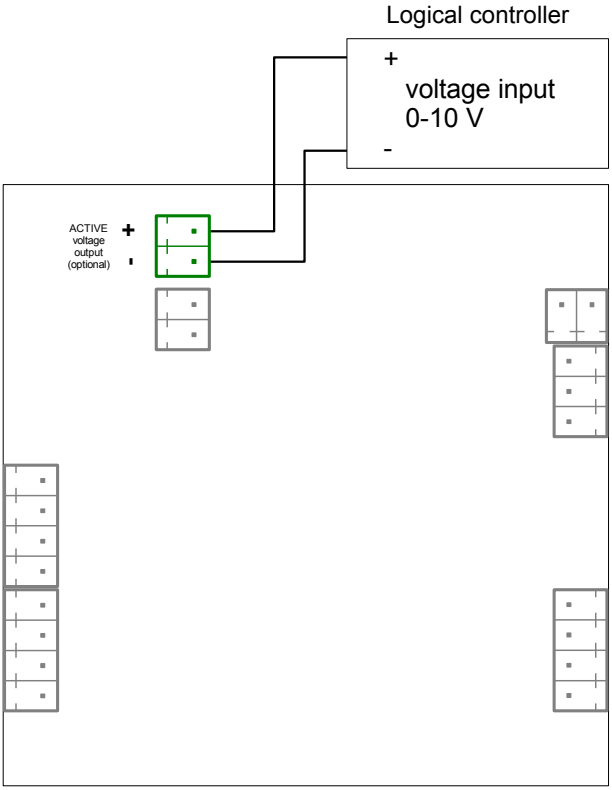

Figure 4.59. Example of active voltage outputs connection (for device with active voltage output only)

5. FRONT PANEL DESCRIPTION

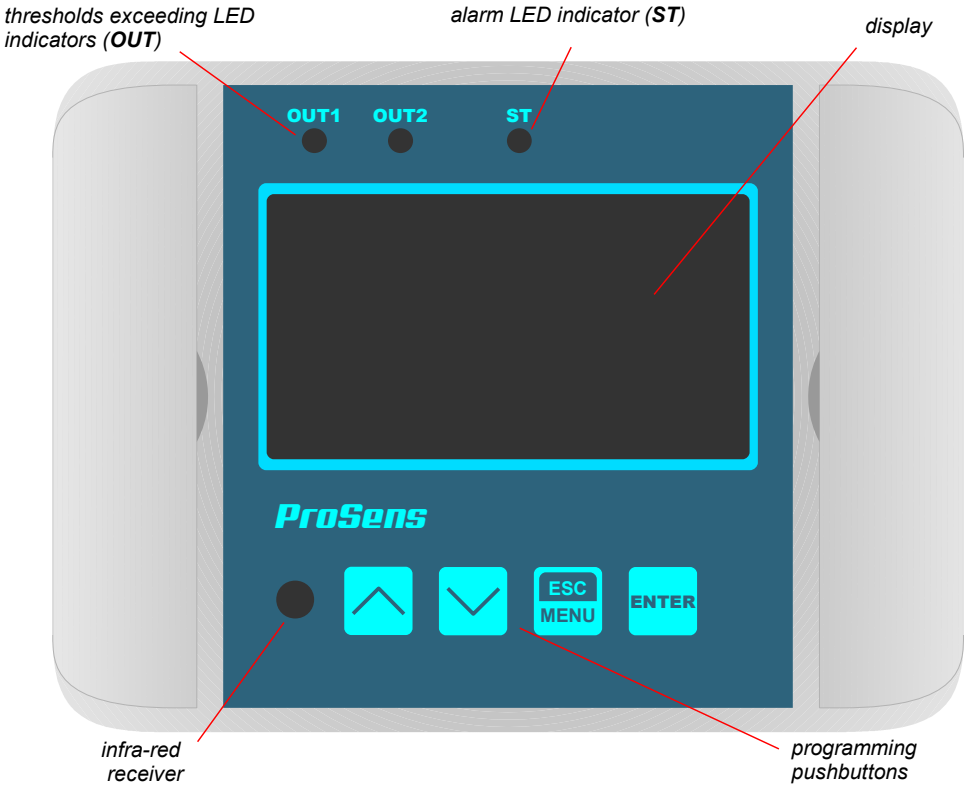

Symbols and functions of push-buttons:

ESC MENU

Symbol used in the manual: **[ESC/MENU]**
Functions:
- Enter to main menu (press and hold by at least 2 sec.)
- Exit the current level and Enter to previous menu (or measure mode)
- Cancel the changes made in parameter being edited
- permanent Hold reset

ENTER

Symbol used in the manual: **[ENTER]**
Functions:
- Start to edit the parameter
- Enter to the sub-menu, Enter *Quick Access* from measurement screen
- Confirmation of changes made in parameter being edited

Symbol used in the manual: **[^] [v]**
Functions:
- Change of the present menu,
- Modification of the parameter value,
- Change of the display mode.

6. PRINCIPLE OF OPERATION

After turning the power supply on, for about 3 seconds **Device: ProSens**, **Serial no.**, **Soft. ver.**, **Device type**. Informations are showed on the display, next the controller goes to the measurement mode.

6.1. LOGIC STRUCTURE

The **ProSens** is designed to measure, display and control few physical quantities in fast and easy way. It was achieved by using elastic block structure which allows to connect particular device processes according to the user's requirements thanks to logical channels which are bridges between input and output circuits. There are four logical channels available but the device has a possibility to display one, two or four channels on the screen but channels which are not displayed are still operating. The source for each channel can be one of the measure inputs (universal input or digital sensor input), but also modbus input and mathematical functions.

The advantage of this solution is intuitive operation and easy way of configuring the device.

The logical structure is shown in Figure 6.1.

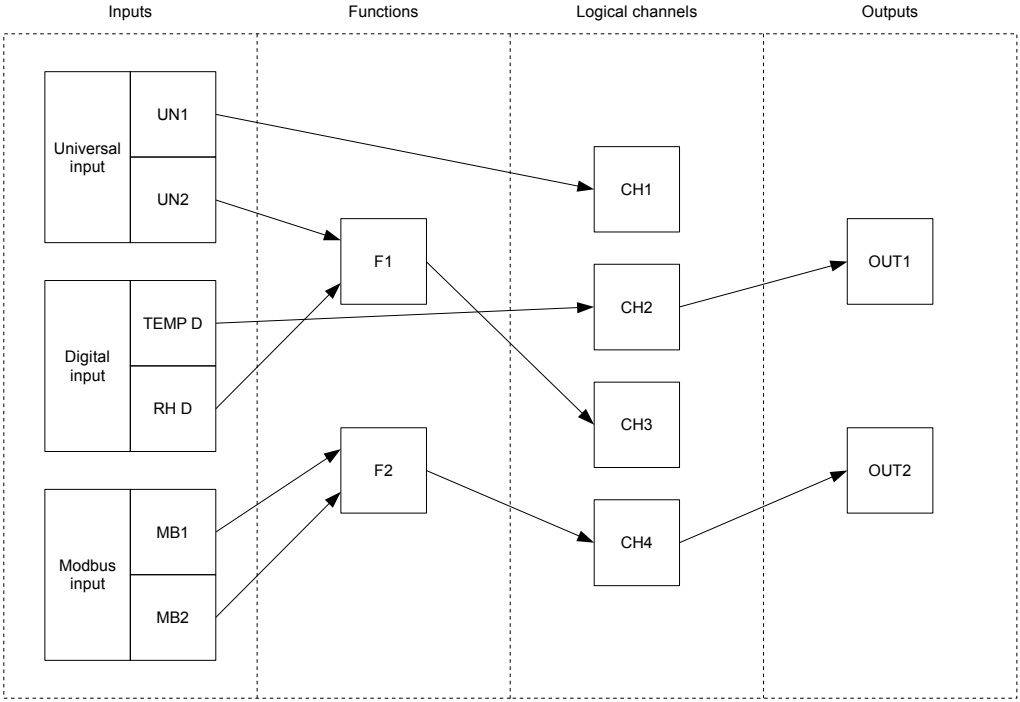

Figure 6.1. General logical structure of the block connections

6.2. INPUT TYPES

The device has possibility to install tree type of inputs: Digital, Modbus and Universal. Each of them can be used as a data source for further processing and displaying (**Figure 4.44**). There is short description of those inputs below.

6.2.1. Digital Input

Digital Input can be installed in two versions: for temperature measurement (**TEMP**) or for temperature and humidity measurement (**TEMP + RH**).

Digital Input for temperature measurement is built of two connectors designed for two-wired sensor. Digital Input for temperature and humidity measurement is built of four connectors designed for four-wired sensor. The measurement is automatic and there is no need for activating or refreshing it.

Parameters of those inputs are shown in **chapter 7.3.2. "Inputs" menu**.

6.2.2. Modbus Input

Each **ProSens** has RS-485 port installed, which allows to connect to Modbus network. Thanks to that and thanks to built-in registers the device can download data from any source connected to Modbus network.

Description of Modbus input parameters is in chapter **7.3.6. "RS485 settings" menu** and register list of the device is in chapter **8.1. List of registers**.

6.2.3. Universal Input

One or two Universal Inputs (**UN**) can be installed in the Device on the clients demand. Each of them can measure several quantities in few ranges: milliamperes (**mA**), volts (**V**), millivolts (**mV**), resistance (**RTD**) and temperature (**TC**). This allows to use **ProSens** in many applications.

6.3. MEASUREMENT MODE

In the measure mode, the measurement results, converted over selected characteristic, are displayed on the LED display. The device calculates measurement into values according to user characteristic. The measurement range equal to the nominal range is called: ***nominal measurement range***. The measurement range equal to the extended nominal range is called: ***permissible measurement range***. Extended ranges are available only for input in current or voltage mode (Figure 6.2, 6.3).

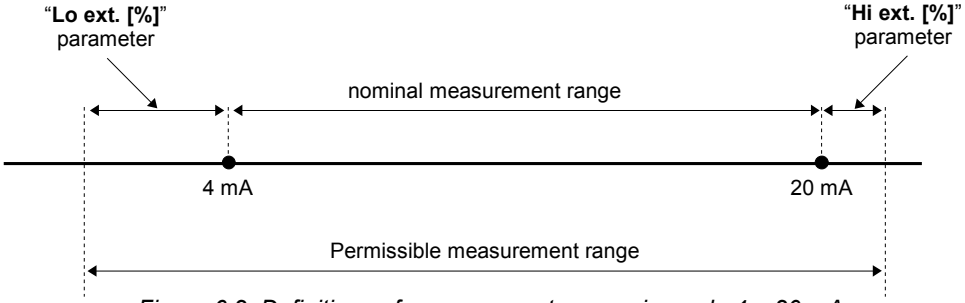

Figure 6.2. Definitions of measurement ranges in mode 4 ÷ 20 mA

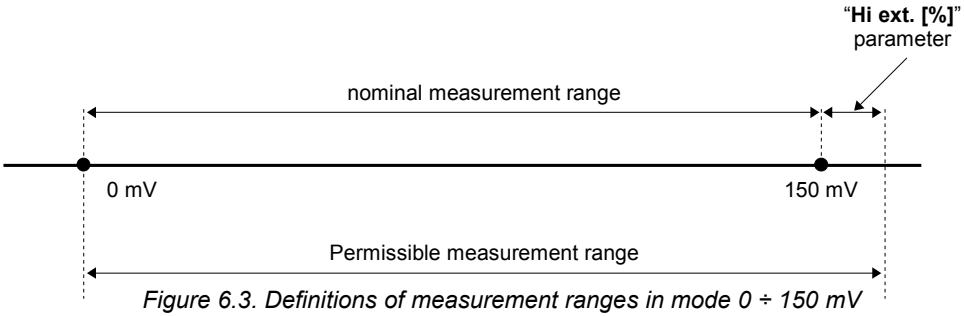

Figure 6.3. Definitions of measurement ranges in mode 0 ÷ 150 mV

If the result of measurement exceeds the ***permissible measurement range***, warning "--**Hi**--" or "--**Lo**--" is displayed rather than input signal, depending on exceeded value (see description of "**Lo ext. [%]**" and "**Hi ext. [%]**" parameters, paragraph *"**Inputs**" menu*). The warning can be effect of measurement circuit malfunction. In that case "--**Lo**--" means shortcut and "--**Hi**--" means break of measurement circuit. If sensor failure will be detected (e.g. broken wires), then "--**SErr**--" warning will be displayed.

If the measurement value do not exceeds ***permissible measurement range*** but displayed value exceeds range -999 ÷ 9999, the warning "--**Ov**--" is displayed rather than the calculated result.

In the measurement mode user can check main thresholds values only for relay outputs. After pressing **[ENTER]** button, the threshold and its thresholds and hysteresis will be displayed on the display. If the selected relay is unlocked in "Quick Access" menu (see **chapter 7.3.11. "Quick Access" menu**) then the user can change the value of a threshold and hysteresis.

All accessible parameters can be changed by entering the menu (see chapter ***7. DEVICE PROGRAMMING***). Use the local keyboard or the remote controller to do it. (Note: all parameters can be remote changed via RS-485 interface).

Configuration of the device (via menu or RS-485 interface) **does not stop measures**.

6.3.1. Detection of the peak values

The **ProSens** controller is equipped with peaks detection function. It can detect a peaks of the input signal and display their values. Presets connected with this function are placed in "**Hold**" menu (see description in chapter **7.3.2. "Inputs" menu**) and it only occurs for universal inputs. The detection of the peak can be done if the measured signal raises and drops of value at least equal to parameter "**Value**". Detected peaks are displayed during the time defined by parameter "**Hold time"**. If a new peak will be detected while one is displayed, this new peak will be displayed and display time counter will be cleared (**Figure 6.4**).

If no peaks are detected while time "**Hold time**" elapses**,** device starts to show the current value of input signal again. If "**Disp. value**" is set on "**hold**" then setting parameter "**Hold time"** is set as **0.0** causes holding peak value until **[ESC]** button is pressed. If "**Disp. value**" is set on "**real**" then value **"Hold time"** is set as **0.0** means no holding. Displaying peak value is signalized by displaying HOLD text in bottom left corner below displayed value.

All of the outputs can be controlled depend on the current value of input signal or the peak value (see **chapter 7.3.2. "Inputs" menu**).

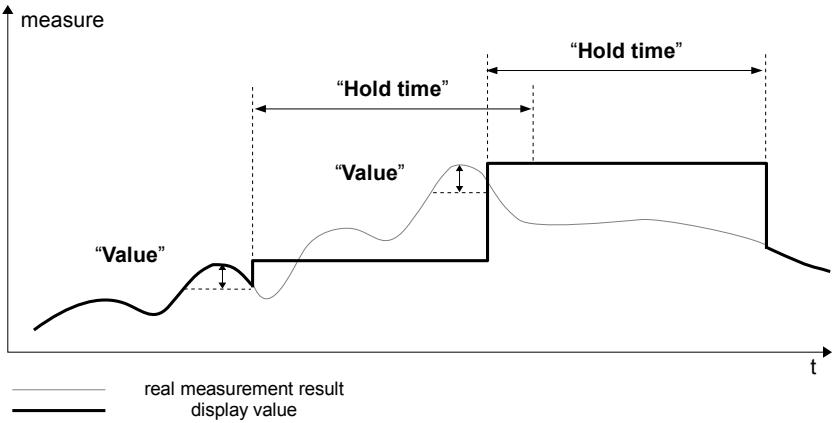

Figure 6.4. Process of peaks detection

6.4. DISPLAYED VALUES CALCULATION

This chapter applies only to universal inputs

For simplicity of examples it's assumed that universal input is in current mode. All calculations are related to this input. When voltage input is selected calculations are similar (be sure of particular ranges and units).

The first step to compute the result of measure is the calculation of the normalized result (it means result of 0-1 range). To do it, the begin of the input range (0 mA for 0-20 mA range, and 4 mA for 4-20 mA range) must be subtracted from measured value. Next, received result must be divided by the width of the input range (it means 20 mA for 0-20 mA range, and 16 mA for 4-20 mA range). So normalized result can be expressed by expressions:

$$I_n = \frac{I_{inp.} - 4}{16} \qquad for \quad 4 \div 20\,mA \quad range$$

$$I_n = \frac{I_{inp.}}{20} \qquad for \quad 0 \div 20\,mA \quad range$$

where $I_{inp.}$ Means input current (in mA),
I_n – normalized result.

If measured value exceeds the nominal input range (0-20 mA or 4-20 mA) and do not exceed the permissible input range (defined by "**Lo ext. [%]**" and "**Hi ext. [%]**" parameters) then received normalized I_n result will exceed 0-1 range, e.g. input range 4-20 mA, input current = 3 mA – the normalized result is equal -0,0625, and for input current = 22 mA, the normalized result is equal 1,125. In such cases presented expressions are still correct.

6.4.1. Ways for measurement calculations

The way to calculate measured value depends on type of input characteristic. All further calculations are shown for 4 – 20 mA current range.

6.4.1.1. Linear characteristic

The normalized result is converted by fixed coefficients determined by "**Lo value**" and "**Hi value**" parameters (when the normalized results is equal 0, then value "**Lo value**" is displayed, and when the normalized results is equal 1, then value "**Hi value**" is displayed). Expression presented below shows the manner of result calculation:

$$W = I_n \times (\text{"Hi value"} - \text{"Lo value"}) + \text{"Lo value"},$$

where **W** means the displayed value.

The value of the "**Lo value**" parameter can be higher than the value of "**Hi value**" parameter. In such a case, for an increasing value of input current the displayed value decreases.

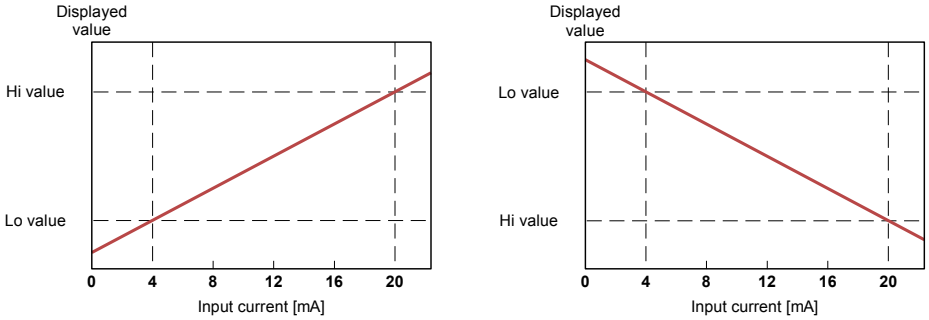

*Figure. 6.5 Normal ("**Lo value**" < "**Hi value**") and inverted ("**Lo value**" > "**Hi value**") characteristic*

6.4.1.2. Square characteristic

The normalized result is squared and further conversion is done as for linear characteristic. Conversion is made accordingly with the expression:

$$W = I_n^2 \times ("Hi\ value" - "Lo\ value") + "Lo\ value",$$

where **W** means the displayed value.

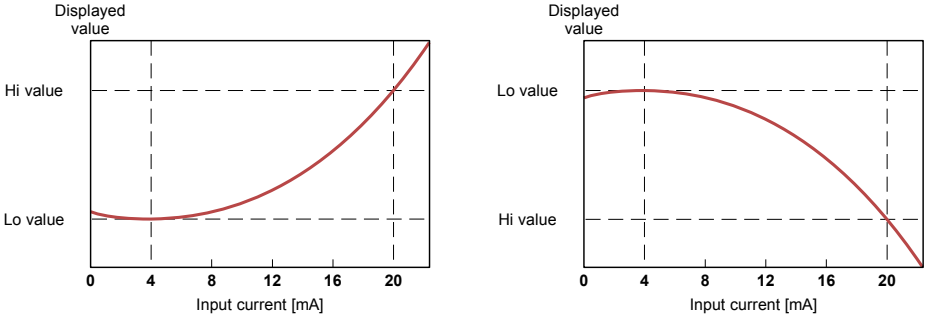

*Figure. 6.6 Normal ("**Lo value**" < "**Hi value**") and inverted ("**Lo value**" > "**Hi value**") characteristic*

6.4.1.3. Square root characteristic

The normalized result is rooted and further conversion is done as for linear characteristic. Conversion is made accordingly with the expression:

$$W = \sqrt{I_n} \times ("Hi\ value" - "Lo\ value") + "Lo\ value",$$

where W means the displayed value.

Showed above expression is not valid when normalized result is negative. It is possible for 4-20 mA mode only. In this case (I_n**<0**) the displayed result is equal "**Lo value**" (see graphs below).

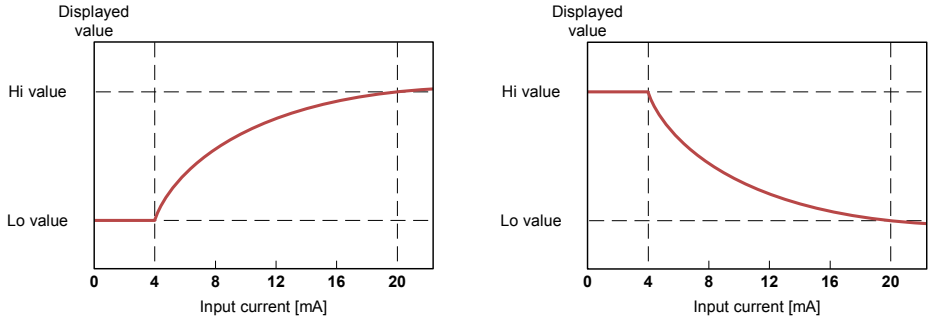

*Figure. 6.7 Normal ("**Lo value**" < "**Hi value**") and inverted ("**Lo value**" > "**Hi value**") characteristic*

6.4.1.4. User defined characteristic

User defined characteristic is defined as set of X-Y points. Number of the points is variable and may be set from 2 to 20 points which make linear segments (see graph and see **chapter 7.3.2. "Inputs" menu**).

Due to the normalized result I_n, the device computes specific segment, e.g. for characteristic from figure below, and I_n = 0,65 the segment between points X = **50.0** and X = **70.0** will be chosen.

Let's mark those points as PL (point low) i PH (point high) - in this example PL= **50.0** and PH = **70.0** and the normalized result I_n for the point PL as I_p (in this example $I_p = I_n(PL)$ = 0,5). The displayed result is calculated accordingly to the expression:

$$W = (I_n - I_p) \times \frac{[Y(PH) - Y(PL)]}{[X(PH) - X(PL)]} \times 100 + Y(PL)$$

where Y(PH), X(PH), Y(PL), X(PL) mean values of X and Y coordinates of PH i PL points.

If the normalized result exceeds the user defined characteristic values, then specific utmost segment, defined by two next points, is used for calculations. If characteristic from figure below is used, and if I_n**>1** then segment defined by points X(PL) = **90.0**, X(PH) = **100.0** will be used.

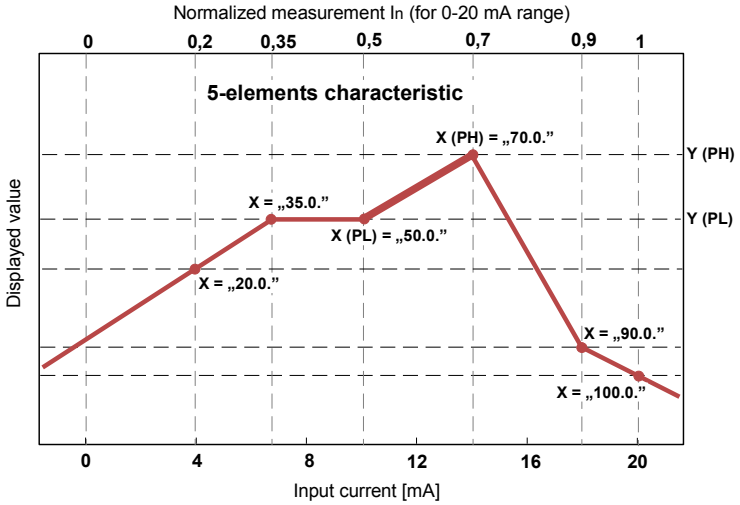

Figure. 6.8 Example of user defined characteristic

6.4.1.5. Volume characteristics of a cylindrical tank

Volume characteristics of a cylindrical tank is defined by parameters of tank (see **chapter 7.3.2. "Inputs" menu**). Normalized input is proportional to level 'h' and linear scaling by parameters: "**Tank tSn**", "**Tank tSh**".

For normalized input value equal 0, displays value "**Tank tSn**",
for normalized input value equal 1, displays value "**Tank tSh**" + "**Tank tSn**" (**Figure 6.9**).

The linear scaling can be expressed as follow:

$$h=I_n \cdot \text{"Tank tSh"} + \text{"Tank tSn"}$$

where 'h' is level of liquids, gases or solids in the tank, see **Figure 6.10**, **Figure 6.11**,
'I_n' is normalized level of liquid etc.

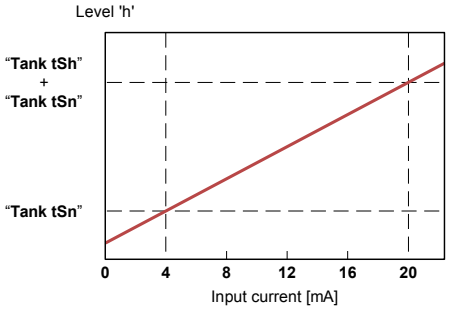

Figure 6.9 The characteristic of level of liquids, gases or solids in tank depending on input current in 4÷20 mA range.

Volume of tank can be write by general formula:

$$V = \int P_p \cdot dh$$

Possible combination of tank shape for calculation the volume:

cylindrical tank in vertical position		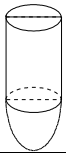	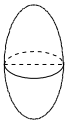			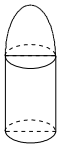	
cylindrical tank in horizontal position		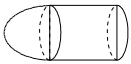	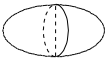	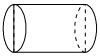	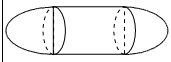	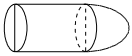	
parameters setting (for vertical and horizontal position of tank)	"**Tank th2**"=0 "**Tank th3**"=0	"**Tank th3**" = 0	"**Tank th2**" = 0	"**Tank th1**" = 0 "**Tank th3**" = 0	-	"**Tank th1**" = 0	"**Tank th1**"=0 "**Tank th2**"=0

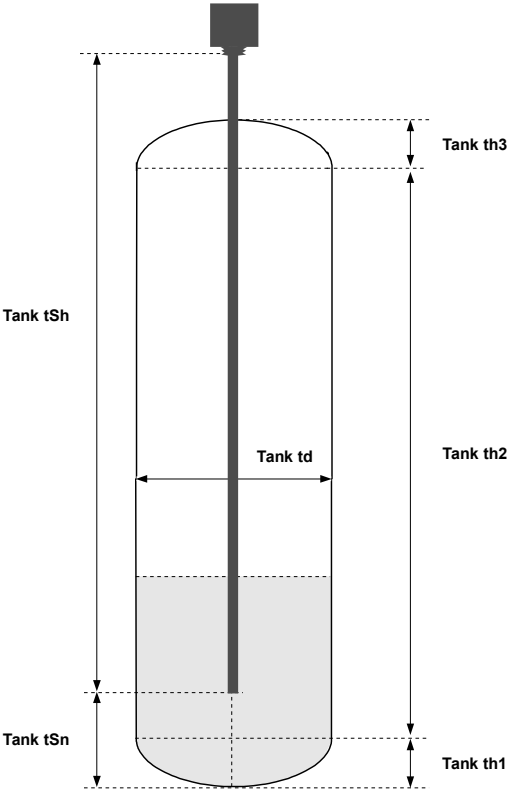

Figure 6.10 Parameters of cylindrical tank in vertical position.

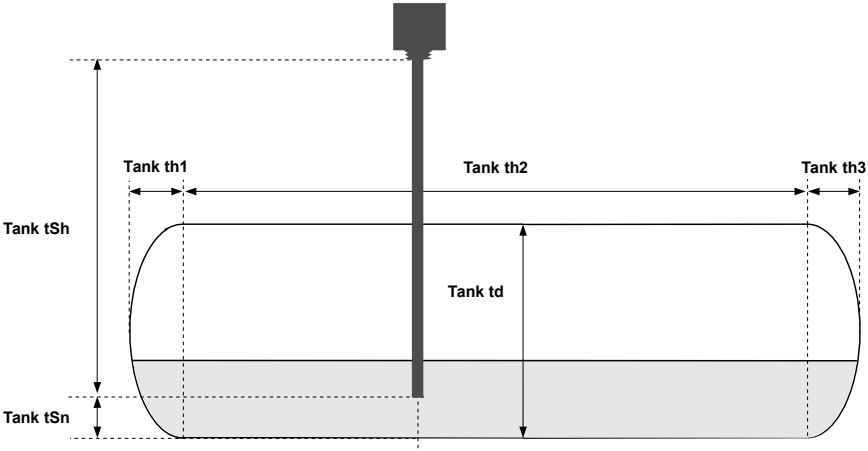

Figure 6.11 Parameters of cylindrical tank in horizontal position.

6.4.1.6. Examples of calculations

Example 1: ***Selection of the permissible input range ("4-20 mA" mode)***

If in "**4-20 mA**" mode the user sets "**Lo ext. [%]**" = 20,0% and "**Hi ext. [%]**" = 10,0%, then permissible input currents range will be equal: 3,2 mA ÷ 22 mA. Lower border of the range is the result of calculations: 4 mA - 4 mA × 20%, and the higher : 20 mA + 20 mA × 10%.

Example 2: ***The normalized I_n result calculation***

Let the input mode = 4-20 mA. The normalized I_n result is calculated accordingly to the expression on page **48**, so if I_{in} = 10 mA then 10 mA - 4 mA = 6 mA, and this result should be divided by the width of input range (16 mA). Finally the normalized result: $I_n = 6/16 = 0{,}375$.

In case when input current exceeds nominal measurement range, calculations are similar. For example if input current is equal 2,5 mA then $I_n = (2{,}5 - 4)/16 \cong -0{,}0938$, and if input current is equal 20,5 mA then $I_n = (20{,}5 - 4)/16 \cong 1{,}0313$.

Example 3: ***The linear characteristic***

Let the input mode = 4-20 mA, and parameters "**Lo value**" and "**Hi value**" equal to -300 and 1200 respectively. The calculations will be done for three different input currents from example 2.

a) I_{in} =10 mA and I_n = 0,375
Accordingly to expression on page **48** for linear characteristic:
0,375 × [1200 -(- 300)] ≅ 562 and next, the "**Lo value**" value is added to the result , so the displayed value:
W ≅ 562 + (-300) = 262
b) I_{in} = 2,5 mA and I_n = -0,0938.
W ≅ -441.

c) I_{in} = 20,5 mA and I_n = 1,0313.
W ≅ 1247.

Example 4: ***The square characteristic***

Let the input mode = 4-20 mA, and parameters "**Lo value**" and "**Hi value**" equal to -300 and 1200 respectively. The calculations will be done for there different input currents from example 2.

a) I_{in} =10 mA and I_n = 0,375
Accordingly to expression on page **49** for square characteristic: $(0{,}375)^2$ × [1200 -(- 300)] ≅ 211.
and next, the "**Lo value**" value is added to the result , so the displayed value:
W ≅ 211 + (-300) = -89

b) I_{in} = 2,5 mA and I_n = -0,0938.
W ≅ -287.

c) I_{in} = 20,5 mA and I_n = 1,0313.
W ≅ 1295.

Example 5: The square root characteristic

Let the input mode = 4-20 mA, and parameters "**Lo value"** and "**Hi value**" equal to -300 and 1200 respectively. The calculations will be done for there different input currents from example 2.

a) I_{in} =10 mA and I_n = 0,375
Accordingly to expression on page **49** for square root characteristic:
$\sqrt{0,375}$ × [1200 -(- 300)] ≅ 919.
and next, the "**Lo value**" value is added to the result , so the displayed value:
W ≅ 919 + (-300) = 619

b) I_{in} = 2,5 mA and I_n = -0,0938 , normalized result is negative , so the displayed value is equal to "**Lo value**" parameter: W ≅ "**Lo value**" = -300.

c) I_{in} = 20,5 mA and I_n = 1,0313.
W ≅ 1223.

Example 6: The user defined characteristic

Let the input mode = 4-20 mA, and the user selected the 10 segment characteristic. To do this it is necessary to enter X and Y coordinates of 11 points (see ***chapter 7.3.2. "Inputs" menu***).
The calculations will be done for three different input currents from example 2, so in calculations some of the segments will be used only.

Let the following points will be given:
X1 = **00.0**, Y1 = **-50.0**,
X2= **10.0**, Y2 = **-30.0**,
....
X6 = **30.0**, Y6 = **30.0**,
X7 = **40.0**, Y7 = **80.0**,
....
X10 = **90.0**, Y10 = **900.0**,
X11 = **100.0**, Y11 = **820.0**,

Additionally all other points must to be defined and stored in the device memory.

a) I_{in} =10 mA and I_n = 0,375

The segment defined by X6 = **30.0** and X7 = **40.0** for this I_n will be selected. Accordingly to expressions given for user defined characteristic (see page **50**) X6(PL) = 30, Y6(PL) = 30, X7(PH) = 40**,** Y7(PH) = 80 and I_p = 0,3 , the displayed value :

$$W = (I_n - I_p) \times \frac{[Y(PH) - Y(PL)]}{[X(PH) - X(PL)]} \times 100 + Y(PL) =$$

$$= (0{,}375 - 0{,}3) \times \frac{[80 - 30]}{[40 - 30]} \times 100 + 30 \simeq 67$$

b) I_{in} = 2,5 mA and I_n = -0,0938, because of the normalized I_n value is lower than 0, the segment defined by X1 and X2 will be selected. X1(PL) = 0, Y1(PL) = -50, X2(PH) = 10**,** Y2(PH) = -30 and I_p = 0. For these values the displayed value W ≅ -69.

c) I_{in} = 20,5 mA and I_n = 1,0313. , because of the normalized I_n value is higher than 1, the segment defined by X10 and X11 will be selected, and X10(PL) = 90, Y10(PL) = 900, X11(PH) = 100**,** Y11(PH) = 820 and I_p = 0,9 for these values the displayed value W ≅ 795.

<u>Example 7:</u> Volume characteristics of a cylindrical tank in the vertical position

We assume that the user has oil tank in the shape of the cylinder located in vertical position. The tank has dimensions: height 10 m, diameter 4 m and length of the sensor 10 m. The output of signal of the sensor has 4÷20 mA range.

In first step, we set type of input range 4÷20 mA (see parameter MENU -> "**Inputs**" -> "**UNx**" -> "**Input mode**"). Next we defined the parameters of tank dimension and location of sensor:

"**Tank tSn**"=00,00
"**Tank tSh**"=10,00

"**Tank th1**"=00,00
"**Tank th2**"=10,00
"**Tank th3**"=00,00
"**Tank td**"=04,00

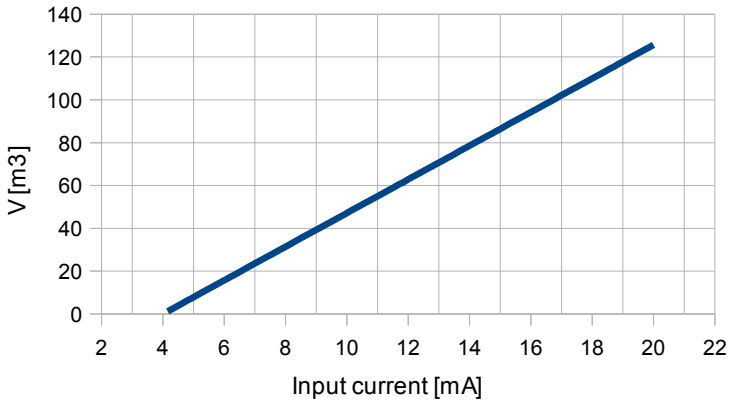

Figure 6.12 The volume characteristic of tank depending on input current in 4÷20 mA range.

***Example 8:* Volume characteristics of a cylindrical tank in the horizontal position**

We assume that the user has tank for wheat in the shape of the cylinder located in horizontal position. The tank has dimension: height in first part is 2 m, height in second part is 8.05 m, diameter 3.26 m and length of the sensor 10 m. The output of signal of the sensor has 4÷20 mA range.

In first step, we set type of input range 4÷20mA (see parameter MENU -> "**Inputs**" -> "**UNx**" -> "**Input mode**"). Next we defined the parameters of tank dimension and location of sensor:

"**Tank tSn**"=00,00
"**Tank tSh**"=10,00

"**Tank th1**"=02,00
"**Tank th2**"=08,05
"**Tank th3**"=00,00
"**Tank td**"=03,26

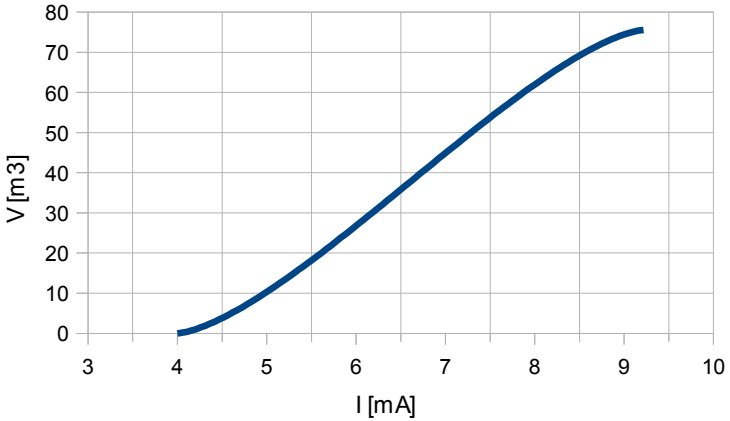

Figure 6.13 The volume characteristic of tank depending on input current in 4÷20 mA range.

***Example 9:* Current output value calculation**

Let the current output parameters be:
"modE" = **"4-20"**, **"OUtL"** = 100, **"OUtH"** = 200, **"Lo r"** = 5.0, **"Hi r"** = 5.0
Parameters **"Lo r"** and **"Hi r"** define working range of current output to 3.8 ÷ 21 mA.
Output current will be calculated for three displayed values „D":

a) D = „17.5"
According to formula from page **74**:
I_{out} = (17.5-10.0) / (20.0-10.0) × 16 mA + 4 mA = 0.75 ·16 + 4 = 16 mA
Calculated I_{out} do not exceeds the output working range (3.8 - 21 mA).

b) D = „20.5"
According to formula from page **74**:
I_{out} = (20.5-10.0) / (20.0-10.0) × 16 mA + 4 mA = 1.05 ·16 + 4 = 20.08 mA
Calculated I_{out} do not exceeds the output working range (3.8 - 21 mA).

c) D = „30.0"
According to formula from page **74**:
I_{out} = (30.0-10.0) / (20.0-10.0) × 16 mA + 4 mA = 2 ·16 + 4 = 36 mA.
Calculated I_{out} exceeds the output working range (3 - 21 mA), so current output will generate current equal to the upper border of range defined by parameter **"Lo r"** i **"Hi r"** (it means 21 mA).

6.5. CONTROL OF THE RELAY OUTPUTS

The control of the object (measured signal) is realized via relay outputs. Front panel LEDs named "**OUT**" indicates the state of particular relay output. The LED does not shine when the relay is open and it shines in red color when the relay is closed.

Modes of the control can be changed depend on the values of parameters "**Mode**", "**Source**", "**Trig. value**", "**SetP1**", "**SetP2**", "**Hysteresis**", "**tON**", "**tOFF**", "**Unit**" and "**Alarm**". Depend on "**Mode**" parameter, relays can be not used or controlled over one or two thresholds values.

If one threshold is used (**Figure 6.14**) the relay can be turned on ("**Mode**" = "**ON**") or off ("**Mode**" = "**OFF**") when the input signal value is contained in ***zone A.*** If two thresholds are used (**Figure 6.15**) the relay will be turned on when value of input signal is contained in ***zone A*** ("**Mode**" = "**IN**") or ***zone B*** ("**Mode**" = "**OUT**") and turned off if the signal is contained in the second one.

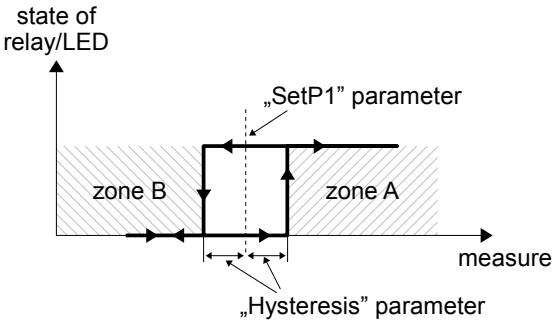

Figure 6.14. One threshold control of the relay/LED outputs

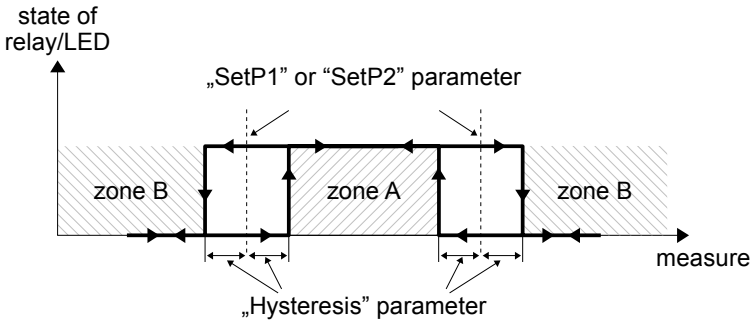

Figure 6.15. Two threshold control of the relay/LED outputs

The relay outputs and LEDs (named **OUT**) can be controlled depend on both - the current value and the peak value (when peak detection is active) of the input signal.

6.5.1. One threshold mode

Figure 6.16 presents the principle of relay outputs operation for one threshold mode, and an example values of other parameters.

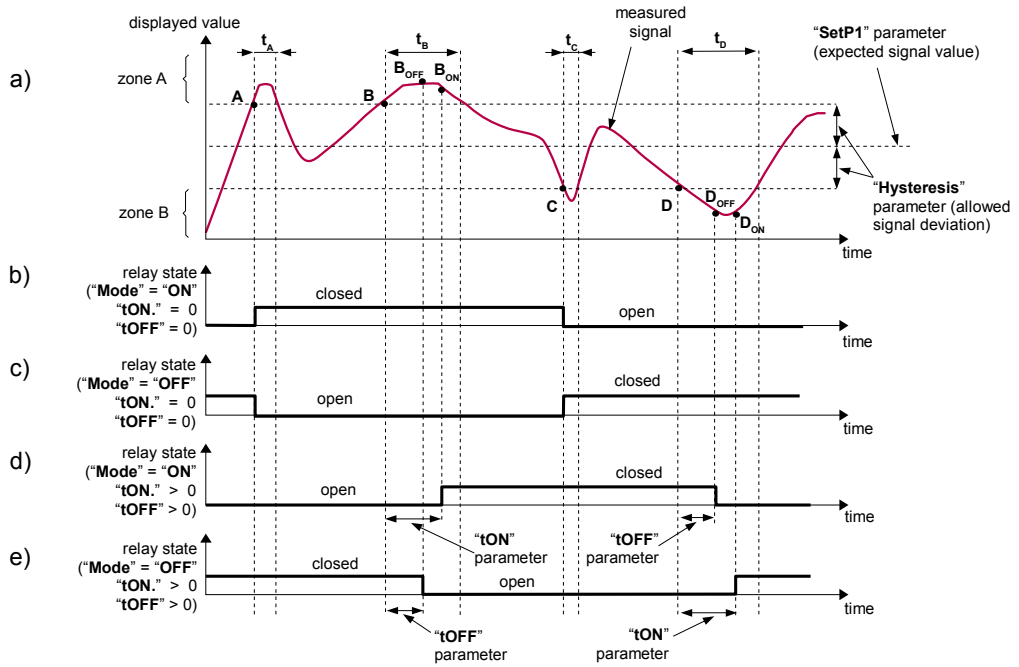

Description:

A, B, C, D - points where measured signal exceeds border values (expected value ± allowed deviation)

B_{ON} ,B_{OFF} ,D_{ON} ,D_{OFF} - relays state changes moments: (for "**tON**" > 0, "**tOFF**" > 0)

t_A , t_B , t_C , t_D - time periods while input signal is in zone A or zone B

Figure 6.16. Principle of LED/relay output operation for one threshold mode

Parameter "**SetP1**" sets a **threshold** of the relay, and parameter "**Hysteresis**" sets a **hysteresis** of the relay (**Figure 6.16 a**). The relay can change his state **only** when input value exceeds (over or under) ***border value*** and t_A ,t_B ,t_C ,t_D times (**Figure 6.16**) are bigger than the time defined by parameters "**tON**", "**tOFF**" and "**Unit**". ***Border values*** means values equal ***threshold+hysteresis*** and ***threshold-hysteresis*** respectively.

If "**tON**" and "**tOFF**" parameters are set to "0", then the relay state will be changed **as soon** as input value exceeds any of the ***border val,ues*** (see points A and C, **Figure 6.16 a**, **b**, **c**).

If values of "**tON**" or/and "**tOFF**" are positive, then relay state will be turned on if the input value exceeds the ***border values*** and stay bigger (or lower) during at least "**tON**" (see points B_{ON}, D_{ON}, **Figure 6.16 a**, **d**, **e**). Similarly, the relay will be turned off if time "**tOFF**" elapse since the input signal value exceeds any of the ***border values*** (see points B_{OFF}, D_{OFF}, **Figure 6.16 a**, **d**, **e**).

If tA ,tB ,tC or tD (when input signal stay in ***zone A*** or ***zone B***) are lower than parameters "**tON**" or "**tOFF**", the relay will not change his state (see points A and C, Figure 6.16 a, d, e).

The state of relay output while the input value exceeds the ***border values*** (points A, B, C, D) is described by parameter "**Mode**"**.** The relay can be turned on ("**Mode**" = "**ON**"), or turned off ("**Mode**" = "**OFF**") when input signal value is contained in ***zone A*** (Figure 6.16 a).

The parameter "**Alarm**" allow user to set the relay output behaviour in critical situations (e. g. Input values exceeds ***permissible measurement range***)**.** User can select that the relays will be turned on, turned off,or not changed in critical situations.

All parameters connected with relay outputs are described in paragraph "***Outputs" menu***.

6.5.2. Two thresholds mode

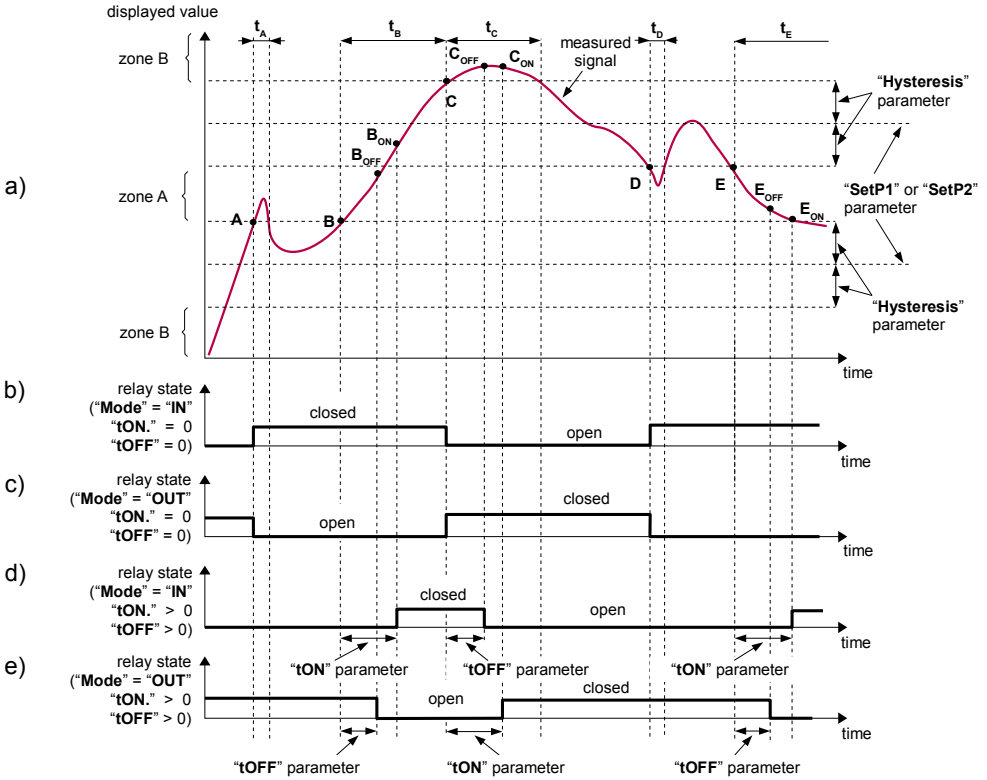

Description:

A, B, C, D, E - points where measured signal exceeds border values (expected value ± allowed deviation)

B_{ON} ,B_{OFF} ,C_{ON} ,C_{OFF} ,E_{ON} ,E_{OFF} - relays state changes moments: (for "**tON**" > 0, "**tOFF**" > 0)

t_A , t_B , t_C , t_D , t_E - time periods while input signal is in zone A or zone B

Figure 6.17. Principle of LED/relay output operation for two thresholds mode

Figure 6.17 presents the principle of relay outputs operation for two thresholds mode, and an example values of other parameters. In this mode parameter "**SetP2**" is accessible in common with "**SetP1**", this parameter describes a second threshold of the relay output. The parameters "**Hysteresis**", "**Mode**", "**tON**", "**tOFF**", "**Unit**" and "**Alarm**" are connected with both "**SetP1**" and "**SetP2**" thresholds. While the controlling process, the relay output changes his state depends of both "**SetP1**" and "**SetP2**" thresholds in similar way as it was described in one threshold mode.

If two threshold mode is used, "**Mode**" parameter defines state of the relay output when the input value occurs in a particular zone defined by ***border values*** of both **thresholds**. The relay can be turned on if the input value is contained in ***zone A*** ("**Mode**" = "**IN**") or ***zone B*** ("**Mode**" = "**OUT**") and turned off if it is contained in the second one (**Figure 6.17**).

The sequence of thresholds "**SetP1**" and "**SetP2**" can be set in any order, due to the control of relay outputs is done depend on difference between thresholds values (**zone A**) and outside of threshold values (**zone B**).

6.6. THE ALARM LED

The Alarm LED (marked as **ST** on front panel – see **chapter 5. FRONT PANEL DESCRIPTION**) informs about alarm states which can occur in the device. Led indicates:

color green – power supply is on, no alarm states,
color red – alarm state on at least one active displayed inputs.

Additionally the **ST** Led blinks when the display work temperature range (-20°C ÷ 70°C) is extended.

7. DEVICE PROGRAMMING

The device menu allows user to set all parameters connected to operation of measurement input, control modes, critical situations behaviour, communication via RS-485 and access settings. The meaning of the particular parameters is described in paragraph ***7.3. MENU DESCRIPTION***.

Some of the parameters can be accessed without menu entering. After pressing **[ENTER]** button, a menu with all thresholds and hysteresis will be displayed. If in 15 seconds the user does not press any button, the device will go back to the measurement mode. If quick access for thresholds option is active (see description in **chapter 7.3.11. "Quick Access" menu**), the user can modify their values by selecting wanted threshold (using **[^]** and **[v]** buttons) and pressing **[ENTER]** button and entering a proper value (see **chapter 7.2. PARAMETERS EDITION**).

7.1. PROGRAMMING MENU

To enter main menu (being in the measurement mode) operator must to press and hold at least 2 sec. **[ESC/MENU]** button.

If the user password is defined (see parameter "**Password**"), operator have to enter correct one before proceeding to menu options . Entering of the passwords is similar to the edition of numeric parameters (see chapter **7.2. PARAMETERS EDITION**), however presently editing digit is showed only on the display, other digits are replaced by asterisks. After entering of last digit of the password first menu position will be displayed (if the password is correct) or warning "**Wrong password**" in other case.



Pay attention when device parameters are being changed. If it is possible, turn off controlled installation (machine).

Functions of the buttons while sub-menu and parameters choice:



Selection of sub-menu or parameter for editing. Name of selected item (sub-menu or parameter) is displayed.



Operation of **[ENTER]** button depend on present menu position:

- if the name of some sub-menu is displayed - enter this sub-menu; name of the first parameter (or next level sub-menu) is displayed,
- if the name of some parameter is displayed - enter the edition of this parameter; present value of the parameter is displayed,



[ESC/MENU] button allow user to exit present menu level and goes to upper level menu (or measurement mode).



After about 1 min. since last use of the buttons, device exits the menu mode and returns to the measurement mode (only if no parameters are in editing mode).

7.2. PARAMETERS EDITION

To start edition of any parameter user should select name of desired one using **[^] [v]** buttons and then press **[ENTER]**.

7.2.1. Numeric parameters

Numerical parameters are displayed as decimal numbers. Pressing one of the keys **[^]** or **[v]** causes change of current position (flashing digit) or the sign (+/-). Short pressing of the **[ENTER]** button causes change of the position (digit).

When the last digit is entered and after pressing **[ENTER]** button, a message will be displayed which informs about saved changes. Pressing **[ENTER]** causes saving currently displayed value and pressing **[ESC]** button causes cancelling entered changes and return to main menu.

7.2.2. Switch parameters

Switch parameters can be shown as a list where for each parameter only one option from the list can be selected. For selecting an option from the list **[^]** and **[v]** can be used.

Pressing **[ESC]** button will select and save currently displayed value. Pressing **[ESC]** button will cancel entered changes and return to menu.

7.2.3. Slide parameters

Slide parameter are presented as horizontal graph, where a numeric values can be changed fluently. Short pressing **[^]** or **[v]** button causes respectively increase or decrease of the parameter by one. Pressing and holding **[^]** or **[v]** button causes respectively constant increase or decrease of the parameter until reaching the limit value.

Pressing **[ESC]** button will select and save currently displayed value. Pressing **[ESC]** button will cancel entered changes and return to menu.

7.2.4. Text parameters

Text parameters are string of characters selected from a character table (see **Figure 7.1**) which is placed in device's memory. Entering parameter's new value (see **Figure 7.1** and **Figure 7.2**) consist of selecting characters by marking them in a table displayed below edited text. Currently edited character is surrounded by a frame and it is blinking and its source is indicated by a frame in character table.



Figure 7.1. Select character to edit

Functions of buttons when selecting character to edit (character table is not displayed):

- Selecting edited character position or save text parameter option; Selected character (save option) is marked with the frame

ENTER

- Beginning of editing a character on selected position
- Confirming entered changes and ending editing character (when "**Save**" option is marked by the frame and it is blinking)

ESC MENU

- Cancelling edited changes (any moment)

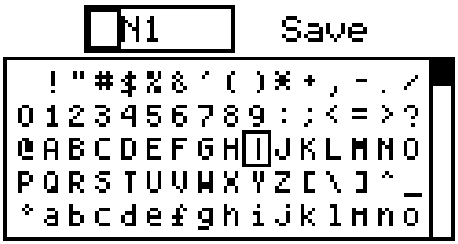

Figure 7.2. Character edit

Functions of buttons when editing selected character (character table is displayed below edited parameter):

- Selecting a character from table position for edited position in text parameter

ENTER

- Confirming entered character in table for edited position and beginning of editing next character or end of editing characters (if edited character was the last one in a string)

ESC MENU

- Cancelling edited changes (any moment)

Because of the limited number of buttons in the device selecting a character can be inconvenient. Because of that , the manufacturer suggests to make any changes using appropriate Modbus registers. For more information see chapter **"RS485 settings" menu** and **8.1. List of registers**.

7.3. MENU DESCRIPTION

"**0 * * ***" - password checking. If a password different from „**0000**" is set, then every enter to main menu follows the entering of password. If entered password is correct then the device enters the main menu else warning "**Wrong password**" is displayed and the device returns to measurement mode.

7.3.1. "Screen settings" menu

Menu which contains all of the screen and displaying settings.

"**Layout**" submenu:

"**Mode**" - way of dividing the screen for measurement values,
- „**1 channel**" - active channels will be displayed one by one on the screen,
- „**2 channels**" - channels will be displayed on screen in pairs (first pair is channel number 1 and 2 and second pair is channel number 3 and 4). When both channels in a pair are inactive then this pair will no be displayed,
- „**4 channels**" - all the channels (active and inactive) are displayed on the screen,

When an option which displays less than 4 channels is set then on the measurement screen there is a possibility to manually switch between displayed active channels using **[^]** and **[v]** buttons.

"**Ch1 source**" - selects an input which should be displayed in channel number 1; there can be following options:
- "**OFF**" - channel is inactive,
- "**Temp**." - a source for the channel will be the digital input in temperature mode,
- "**Humidity**" - a source for the channel will be the digital input in humidity mode,
- "**UN1**" - a source for the channel will be the universal input number 1,
- "**UN2**" - a source for the channel will be the universal input number 2,
- "**MB1**" - a source for the channel will be Modbus registers from 140h to 143h,
- "**MB2**" - a source for the channel will be Modbus registers from 160h to 163h,
- "**F1**" - a source for the channel will be a result of the first mathematical function,
- "**F2**" - a source for the channel will be a result of the second mathematical function,

When all of the channel sources are set as "**OFF**" then on the measurement screen a message will be displayed: "**All channels inactive!!!**".

"**Ch2 source**" - selects an input which should be displayed in channel number 2,
"**Ch3 source**" - selects an input which should be displayed in channel number 3,
"**Ch4 source**" - selects an input which should be displayed in channel number 4,
"**Swap [sec]**" - determines how many seconds a screen with a number of channels determined in "Mode" parameter will be displayed. '0' value in this parameter means that the screen will not switch by it self and it will freeze on the last active view. For manual switching screens use up/down arrows.

"**Display**" submenu:

"**Backlight**" - set backlight of the screen,
„**permanent**" - balcklight is permanent,
„**temporary**" - backlight is on for about one minute since last time any of buttons was pressed,
"**Brightness**" - regulates brightness of the screen (from 0% to 100%),
"**Contrast**" - regulates contrast of the screen (from 0% to 100%),
"**Display mode**" - determines a mode of pixels displaying,
"**normal**" - dark pixels are displayed on bright background,
"**reversed**" - bright pixels are displayed on dark background,

7.3.2. "Inputs" menu

Menu which contains settings of the inputs and functions that are in the device. Depending on the hardware configuration this menu can contain:

"**Temperature**" - submenu which contains parameters of a temperature measuring Digital Input,
"**T. measure**" - turns on the measurement input,
"**Input name**" - editable channel name which will be displayed on measurement screen,
"**°C/°F/K**" - selects a temperature processing characteristic. Available characteristics are: Celsius, Fahrenheit, Kelvin,
"**Recalib.**" - turns on and off a sensor recalibration characteristic,
"**Char. opts.**" - available only for **Temperature** type input and when "**Recalib.**" parameter is set as "**ON**". It contains following options:
"**Add point**" - this option allows user to add points into recalibration characteristic. After selecting this option the device waits for "X" and "Y" coordinates of a new point. Coordinate "X" defines input signal value. Coordinate "Y" defines output value for given "X" coordinate. Th "X" and "Y" coordinates range is: **± 999,9**.
"**Del point**" - this option allows the user to delete points from recalibration characteristic. After selecting this option a list of point appears where using **[^]**, **[v]** buttons the user can select and delete a point from the characteristic after confirming with **[ENTER]** button,
"**Edit point**" - this option allows to modify a point in recalibration characteristic. After selecting this option a list of point appears where using **[^]**, **[v]** buttons the user can select and after pressing [ENTER] button go to editing this point of characteristic. Each coordinate has to be edited and save separately,
"**Def. points**" - unsorted list with all of the points defined in characteristic in order of their insertion. Moving between views can be done using **[^]**, **[v]** buttons,
"**Charakterys.**" - sorted list of all correct defined recalibration characteristic points. Moving between views can be done using **[^]**, **[v]** buttons,

"**Txt. unit**" - four-characters editable unit which will be displayed in channel in 4 channels display mode,

"**Graph unit**" - graphic unit which will be displayed in 1 and 2 channels display mode. In this parameter user can choose: same unit as in "**Txt. unit**" parameter, from predefined graphic unit and own unit which can be uploaded into the device using **S-Config 2** program which is available on the manufacturer's web side,

"**Humidity**" - submenu which contains parameters of a humidity measuring Digital Input,

"**RH measure**" - turns on the measurement input,

"**Input name**" - editable channel name which will be displayed on measurement screen,

"**Recalib.**" - turns on and off a sensor recalibration characteristic,

"**Char. opts.**" - available only for **Humidity** type input and when "**Recalib.**" parameter is set as "**ON**". It contains following options:

"**Add point**" - this option allows user to add points into recalibration characteristic. After selecting this option the device waits for "**X**" and "**Y**" coordinates of a new point. Coordinate "**X**" defines input signal value. Coordinate "**Y**" defines output value for given "**X**" coordinate. The "**X**" and "**Y**" coordinates range is: **± 999,9**,

"**Del point**" - this option allows the user to delete points from recalibration characteristic. After selecting this option a list of point appears where using **[^]**, **[v]** buttons the user can select and delete a point from the characteristic after confirming with **[ENTER]** button,

"**Edit point**" - this option allows to modify a point in recalibration characteristic. After selecting this option a list of point appears where using **[^]**, **[v]** buttons the user can select and after pressing **[ENTER]** button go to editing this point of characteristic. Each coordinate has to be edited and save separately,

"**Def. points**" - unsorted list with all of the points defined in characteristic in order of their insertion. Moving between views can be done using **[^]**, **[v]** buttons,

"**Characteris.**" - sorted list of all correct defined recalibration characteristic points. Moving between views can be done using **[^]**, **[v]** buttons,

"**Txt. unit**" - four-characters editable unit which will be displayed in channel in 4 channels display mode,

"**Graph. unit**" - graphic unit which will be displayed in 1 and 2 channels display mode. In this parameter user can choose: same unit as in "**Txt. unit**" parameter, from predefined graphic unit and own unit which can be uploaded into the device using **S-Config 2** program which is available on the manufacturer's web side,

"**UN1**", "**UN2**" - submenu which contains parameters of a universal input,

"**Input type**" - turns on measurement input, selects range, work mode, type of measured quantity and measurement method,

"**Input name**" - editable channel name which will be displayed on measurement screen,

"**Func. type**" - selects a conversion characteristic,

"**linear**" - linear characteristic, range of displayed values is defined by "**Lo value**" and "**Hi value**" parameters. See also **6.4.1.1. Linear characteristic**,

"**square**" - square characteristic, range of displayed values is defined by "**Lo value**" and "**Hi value**" parameters. See also **6.4.1.2. Square characteristic**,

"**sqr. root**" - square root characteristic, range of displayed values is defined by "**Lo value**" and "**Hi value**" parameters. See also **6.4.1.3. Square root characteristic**,

"**user**" - user characteristic defined by maximal 20 point defined by the user. Adding, editing and removing point of characteristic can be made in menu "**Func. type**" described below,

"**tank vert.**" - volume characteristic of the cylindrical tank in vertical position described by "**Tank th1**", "**Tank th2**", "**Tank th3**", "**Tank td**", "**Tank tSn**", "**Tank tSh**",

"**tank hor.**" - volume characteristic of the cylindrical tank in horizontal position described by "**Tank th1**", "**Tank th2**", "**Tank th3**", "**Tank td**", "**Tank tSn**", "**Tank tSh**",

"**Char. opt.**" - available only for when "**Func. type**" parameter is set as "**user**". It contains following options:

"**Add point**" - this option allows the user to add points into user characteristic. After selecting this option the device waits for "**X**" and "**Y**" coordinates of a new point. Coordinate "**X**" defines input signal value. Coordinate "**Y**" defines output value for given "**X**" coordinate. The "**X**" coordinate value is expressed in percentage. The "**Y**" coordinate value range is **±999,9**. Decimal point is described by "**Dec. point**" parameter,

"**Del point**" - this option allows the user to delete points from user characteristic. After selecting this option a list of point appears where using **[^]**, **[v]** buttons the user can select and delete a point from the characteristic after confirming with **[ENTER]** button,

"**Edit point**" - this option allows to modify a point in user characteristic. After selecting this option a list of point appears where using **[^]**, **[v]** buttons the user can select and after pressing **[ENTER]** button go to editing this point of characteristic. Each coordinate has to be edited and save separately,

"**Def. points**" - unsorted list with all of the points defined in characteristic in order of their insertion. Moving between views can be done using **[^]**, **[v]** buttons,

"**Characteris.**" - sorted list of all correct defined recalibration characteristic points. Moving between views can be done using **[^]**, **[v]** buttons,

"**PT wire**" - selects connection method for PT sensor,
- "3 wire" - the input supports 3-wire sensor,
- "2 wire" - the input supports 2-wire sensor,

"**Filter**" - allows to change a filtering time constant. Expressed in seconds. Allowed values are in range from 0 (no filtration) to 255,

"**Hold**" - menu which contains peak detect options. See also **6.3.1. Detection of the peak values**,
- "**Mode**" - type of detected measured signal changes,
  - "**normal**" - peaks. Rise and then drop of the measured value equal to at least the value in "**Value**" parameter,
  - "**inverted**" - drops. Drop and then rise of the measured value equal to at least the value in "**Value**" parameter,
- "**Value**" - minimal value of the measured signal which will be interpreted as a "peak" or "drop",
- "**Hold time**" - maximal peak of drop time which will be displayed in range **0** to **19.9** with **0.1 second** resolution. If "**Disp. value**" parameter is set as "**real**" then setting "**Hold time**" on **0.0** means that hold function is not active. If "**Disp. value**" is set as "**hold**" then setting "**Hold time**" on **0.0** means that detected peak or drop will be held until **[ESC]** button is pressed,
- "**Disp. value**" - type of value presented on the display,
  - "**real**" - actual value is presented on the display,
  - "**hold**" - peak or drop value is presented on the display (depending on the "**Mode**" parameter),

"**Tank th1**" - hight of the **I** part of the tank in shape of elliptic paraboloid, fixed decimal point: 2, See **Figure 7.3** and **Figure 7.4**,

"**Tank th2**" - hight of the **II** part of the tank in shape of cylinder, fixed decimal point: 2, See **Figure 7.3** and **Figure 7.4**,

"**Tank th3**" - hight of the **III** part of the tank in shape of elliptic paraboloid, fixed decimal point: 2, See **Figure 7.3** and **Figure 7.4**,

"**Tank td**" - diameter of the cylindrical shaped part of the tank fixed decimal point: 2, See **Figure 7.3** and **Figure 7.4**,

"**Tank tSn**" - distance from the probe to the bottom of the tank, fixed decimal point: 2, it is assumed that unit in "**Tank tSn**" is 100 times greater than unit in "**Tank tSh**". See **Figure 7.3** and **Figure 7.4**,

"**Tank tSh**" - measurement range, fixed decimal point: 2, See **Figure 7.3** and **Figure 7.4**,

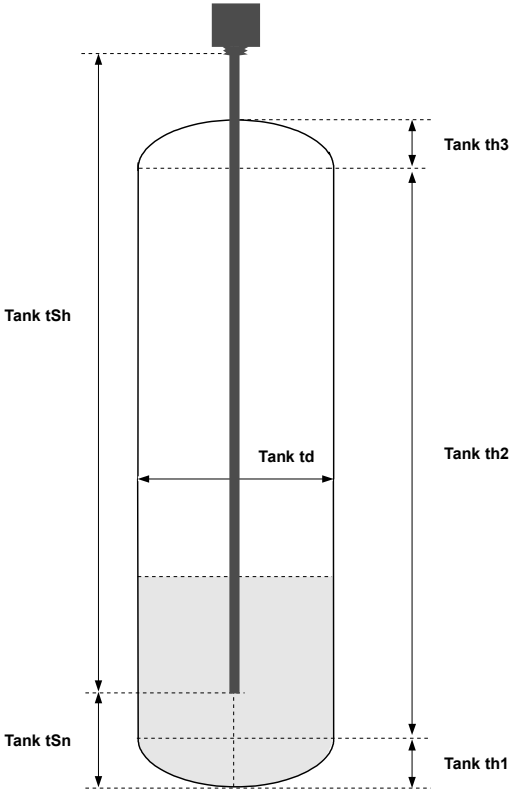

Figure 7.3. Tank parameters in vertical position

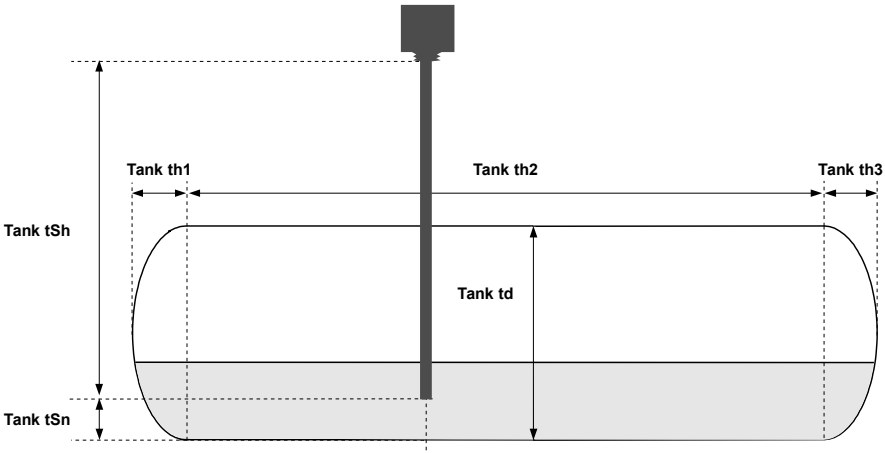

Figure 7.4. Tank parameters in horizontal position

"**Offset**" - correction for temperature inputs (TC and RTD), used for shift measurement result. For TC input range of the shift is ± 99 with precision 1°C, for RTD input range of the shift is ± 9 with precision 0.1°C,

"**°C/°F/K**" - selects scale which should be used in measurements. Available scales are: Celsius, Fahrenheit, Kelvin. This applies to TC and RTD inputs,

"**Dec. point**" - defines decimal point for measurement,

"**Lo value**" - minimal value of measurement result in defined range which can be displayed. This applies to linear, square and root square characteristics,

"**Hi value**" - maximal value of measurement result in defined range which can be displayed. This applies to linear, square and root square characteristics,

"**Lo ext. [%]**" - defines percentage extension of the low measurement range. See **6.3. MEASUREMENT MODE**,

"**Hi ext. [%]**" - defines percentage extension of the high measurement range. See **6.3. MEASUREMENT MODE**,

"**Txt. unit**" - four-characters editable unit which will be displayed in channel in 4 channels display mode,

"**Graph. unit**" - graphic unit which will be displayed in 1 and 2 channels display mode. In this parameter user can choose: same unit as in "**Txt. unit**" parameter, from predefined graphic unit and own unit which can be uploaded into the device using **S-Config 2** program which is available on the manufacturer's web side,

"**MB1**", "**MB2**" - submenu which contains Modbus input parameters,

"**Mode**" - turns on the Modbus input,

"**Input name**" - editable channel name which will be displayed on measurement screen,

"**Dec. point**" - defines decimal point for measurement,

"**Valid. time**" - awaiting time for new write in Modbus register (expressed in seconds). Its exceeding is signalized by pulsing channel name win measurement view and alarm state in that input,

"**Txt. unit**" - four-characters editable unit which will be displayed in channel in 4 channels display mode,

"**Graph. unit**" - graphic unit which will be displayed in 1 and 2 channels display mode. In this parameter user can choose: same unit as in "**Txt. unit**" parameter, from predefined graphic unit and own unit which can be uploaded into the device using **S-Config 2** program which is available on the manufacturer's web side,

"**F1**", "**F2**" - submenu which contains mathematical functions input parameters,

"**Function**" - turns on and selects type of function which the input should fulfil,

"**OFF**" - mathematical function is off,

"**sum**" - mathematical function works as an arithmetic sum. Summands are values from inputs in "**Source 1**" and "**Source 2**" parameters,

"**difference**" - mathematical function works as a difference. The minued is a value from input in "**Source 1**" parameter and the subtrahend is a value from input in "**Source 2**" parameter.

"**average**" - mathematical function works as an arithmetic average of two values from inputs in "**Source 1**" and "**Source 2**" parameters,

"**dew point**" - calculates dew point based on values from inputs in "**Source 1**" and "**Source 2**" parameters. "**Source 1**" parameter is temperature in unit consistent with "**°C/°F/K**" option. "**Source 2**" is relative humidity of the air,

"**Input name**" - editable channel name which will be displayed on measurement screen,

"**Precision**" - precision of displayed function result. Decimal point of input sources is automatically downloaded from their settings,

"**Source 1**" - selects an input which will be first source of values for mathematical function,

"**Source 2**" - selects an input which will be second source of values for mathematical function,

"**°C/°F/K**" - selects scale which should be used in measurements. Available scales are: Celsius, Fahrenheit, Kelvin.

Units of "**Source 1**" and "**Source 2**" parameter should be the same as scale in "**°C/°F/K**" parameter. This applies only to "Function" parameter in "dew point" setting.

"**Txt. unit**" - four-characters editable unit which will be displayed in channel in 4 channels display mode,

"**Graph. unit**" - graphic unit which will be displayed in 1 and 2 channels display mode. In this parameter user can choose: same unit as in "**Txt. unit**" parameter, from predefined graphic unit and own unit which can be uploaded into the device using **S-Config 2** program which is available on the manufacturer's web side,

7.3.3. "Outputs" menu

Menu which contains settings for available in the device outputs. Depending on hardware configuration this menu can contain:

"**AO**" - sumbenu which contains analogue output parameters,

"**Output mode**" - analogue output work mode. Depending on the device version available are following options:

For active current output:

*"**OFF**"* - current output disabled,
*"**4-20 mA**"* - current output enabled with 4 ÷ 20 mA mode,
*"**0-20 mA**"* - current output enabled with 0 ÷ 20 mA mode,
*"**Modbus**"* - current output controlled via RS-485 interface.

For passive current output:

*"**OFF**"* - current output disabled,
*"**4-20 mA**"* - current output enabled with 4 ÷ 20 mA mode,
*"**Modbus**"* - current output controlled via RS-485 interface.

For active voltage output:

*"**OFF**"*	- voltage output disabled,
*"**0-5 V**"*	- voltage output enabled with 0 ÷ 5V mode,
*"**1-5 V**"*	- voltage output enabled with 1 ÷ 5V mode,
*"**0-10 V**"*	- voltage output enabled with 0 ÷ 10V mode,
*"**2-10 V**"*	- voltage output enabled with 2 ÷ 10 V mode,
*"**Modbus**"*	- voltage output controlled via RS-485 interface.

"**Source**" - selects a channel which will be source for controlling the analogue output. Selected channel affects also on decimal point in "**Lo value**" and "**Hi value**" parameters,

"**Trig. value**" - selects a type of value which will control the analogue output (occurs only when the device is equipped with **UN** type input),

"**real**" - controlling takes place based on actual measurement in channel selected in "**Source**" parameter,

"**hold**" - controlling takes place based on peak value in channel selected in "**Source**" parameter,

"**Lo value**" - describes displayed value for which an output signal equal to **lower** range limit will be generated (depending on settings of the output work mode in "**Output mode**" parameter,

"**Hi value**" - describes displayed value for which an output signal equal to **upper** range limit will be generated (depending on settings of the output work mode in "**Output mode**" parameter,

The analogue output value is calculated due to formula give below:

$$Wyj = \frac{W - "Lo\ value"}{"Hi\ value" - "Lo\ value"} \times (B - A) + A$$

where: **W** – displayed value,
Out – analogue output value,
B – higher range limit (20 mA / 5 V/ 10 V),
A – lower range limit (0 mA / 4 mA / 0 V / 1 V / 2 V),

"**Lo ext. [%]**" - defines percentage expansion of the lower nominal measurement range (with resolution 0.1%) due to formula:

$\mathbf{Out}_{min}$ = **A** - (**A** × „**Lo ext. [%]**" %), where:
A – lower signal value range limit.

"**Lo ext. [%]**" value can be set in range 0 ÷ 99,9% (for active current output and active voltage output) or in range 0 ÷ 29,9% (for passive current output),

"**Hi ext. [%]**" - defines percentage expansion of the higher nominal measurement range (with resolution 0.1%) due to formula:

$\mathbf{Out}_{min}$ = **B** + (**B** × „**Hi ext. [%]**" %), where:
A – higher signal value range limit.

"**Hi ext. [%]**" value can be set in range 0 ÷ 19,9% (for active and passive current output) or in range 0 ÷ 9,9% (for active voltage output),

"**Alarm**" - determines the behaviour of analogue output if any critical situation occurs. According to the version of the device this parameter can be set:

For active current output:
- ***"w/o change"*** - current will not change,
- ***"22.1 mA"*** - current will be set to 22.1 mA,
- ***"3.4 mA"*** - current will be set to 3.4 mA,
- ***"0.0 mA"*** - current will be set to 0 mA.

For passive current output:
- ***"w/o change"*** - current will not change,
- ***"22.1 mA"*** - current will be set to 22.1 mA,
- ***"3.4 mA"*** - current will be set to 3.4 mA,

For active voltage output:
- ***"w/o change"*** - voltage will not change,
- ***"11.0 V"*** - voltage will be set to 11.0 V,
- ***"5.5 V"*** - voltage will be set to 5.5 V,
- ***"1.2 V"*** - voltage will be set to 1.2 V.
- ***"0.6 V"*** - voltage will be set to 0.6 V,
- ***"0.0 V"*** - voltage will be set to 0 V.

After the alarm situation goes away the output signal turns back to value calculated base on displayed measurement result.

"**Disp. mode**" - defines a way to display analogue output state on the display:
- "**normal**" - displayed value is in nominal unit output,
- "**percent**" - displayed value is in percentage of the nominal output range,

OUT LED's which are related with appropriate analogue outputs and they are displaying state of that output. Green color means that the output is active, work in nominal range and source input is not in alarm state. Red color means that source input is in alarm state.

"**DO**" - sumbenu which contains relay output parameters,

"**Mode**" - turns on and selects a work mode for relay output:
- "**no action**" - relay is inactive (permanently off)
- "**ON**" - for one threshold controlling the relay turns on when the measurement value is greater than "**SetP1**" **+** "**Hysteresis**",
- "**OFF**" - for one threshold controlling the relay turns on when the measurement value is smaller than "**SetP1**" **-** "**Hysteresis**",
- "**IN**" - for two thresholds controlling the relay turns on when the measurement value is greater than "**lower threshold**" **+** "**Hysteresis**" and lower than "**bigger threshold**" - "**Hysteresis**", where "**lower threshold**" means lower from the "**SetP1**" and "**SetP2**" thresholds and "**bigger threshold**"

means bigger from the "**SetP1**" and "**SetP2**" thresholds,

"**OUT**" - for two thresholds controlling the relay turns on when the measurement value is lower than "**lower threshold**" **+** "**Hysteresis**" and greater than "**bigger threshold**" - "**Hysteresis**", where "**lower threshold**" means lower from the "**SetP1**" and "**SetP2**" thresholds and "**bigger threshold**" means bigger from the "**SetP1**" and "**SetP2**" thresholds,

"**Modbus**" - the relay is controlled via RS-485 protocol,

"**Source**" - selects a channel which will be source of controlling for relay output. Selected channel affects also on decimal point in parameters "**SetP1**", "**SetP2**" and "**Hysteresis**",

"**Trig. value**" - selects a type of value which will control the relay output (occurs only when the "Source" parameter is set on channel which indicates an universal input **UN**),

"**real**" - controlling takes place based on actual measurement in channel selected in "**Source**" parameter,

"**hold**" - controlling takes place based on peak value in channel selected in "**Source**" parameter,

"**SetP1**" - threshold of the first relay output (in range ±9999). **The threshold is the centre of the relay hysteresis range**,

"**SetP2**" - threshold of the second relay output (in range ±9999). **The threshold is the centre of the relay hysteresis range**,

"**Hysteresis**" - hysteresis of the relay (in range 0 ÷ 999). State of the relay changes when the value: **Threshold +** "**Hysteresis**" and **Threshold -** "**Hysteresis**" is extended,

"**tON**" - delay time, after which the relay will be turned on (in case of extension of the defined by **Threshold** and "**Hysteresis**" value). The delay time is defined in range: 0 ÷ 99.9 with precision 0.1. The unit of the delay time is defined by "**Unit**" parameter,

"**tOFF**" - delay time, after which the relay will be turned off (in case of extension of the defined by **Threshold** and "**Hysteresis**" value). The delay time is defined in range: 0 ÷ 99.9 with precision 0.1. The unit of the delay time is defined by "**Unit**" parameter,

"**Unit**" - unit which expresses "**tON**" and "**tOFF**" parameters,

"**second**" - these parameters are expressed in seconds,

"**minute**" - these parameters are expressed in minutes,

"**Alarm**" - defines reaction of the relay in alarm situation:

"**no change**" - relay state will not change,

"**ON**" - relay will be turned on,

"**OFF**" - relay will be turned off,

OUT LEDs corresponds to relays and signal state of that relay. LED does not shine when the relay is open and do shine in red color when the relay is closed.

7.3.4. "Buzzer" menu

Menu which contains sound signal settings. Depending on the hardware configuration this menu can contain:

„**Alarm Ch1-4**" - turns on and off sound signal for alarm situation for any active logical channel,

„**DO1 alarm**" - turns on and off sound signal for alarm situation if the first relay output is closed,

„DO2 alarm" - turns on and off sound signal for alarm situation if the second relay output is closed,

7.3.5. "Password" option

Option which blocks access to the device's menu.

"**Password**" - user password (4-digit number). If this parameter is set on "**0000**" value, the password is off.

If the user do not remember his password, the access to the menu is possible by the "one-use password". To get this password please contact with Marketing Division. "Single use password" can be used only one time, after that it is destroyed. Entering this password causes in clearing of user password, it means sets the user password to „0000".

The "one-use password" can be used ONE TIME ONLY, it is impossible to use it again! The "one-use password" can be restored by Service Division only.

7.3.6. "RS485 settings" menu

Menu which contains RS-485 interface configuration options:

"**Address**" - defines address (from 0 to 199) of the device according to Modbus protocol. If the address is set as 0 the device responds to address 255 (FFh),

"**Baud rate**" - defines serial port baud rate transmission. There are 8 rates available: "**1200**", "**2400**", "**4800**", "**9600**", "**19200**", "**38400**", "**57600**", "**115200**",

"**Remote conf.**" - allows to define access to configuration registers of the device via RS-485 interface. There are available following options:

"***OFF***" - writing registers via RS-485 interface is forbidden,

"***ON***" - writing registers via RS-485 interface is permitted,

"**Timeout**" - defines maximal time (in seconds) between following frames received by the device. If the delay will be greater than the value of "**Timeout**" parameter all of the outputs which are controlled via RS-485 interface will set to alarm state (see "**Alarm**" parameter in **chapter 7.3.3. "Outputs" menu**). "**Timeout**" parameter can be set to value from 0 to 99 seconds. The value 0 means that the time between frames will be not controlled,

"**Resp. delay**" - defines a minimal time after which the device answers the query according to Modbus standard which was received via RS-485 interface. RTU Modbus transmission protocol defines the minimal time of identification/separation for each of the frames as equal to time of 3.5

characters. Used in the device modern RISC type processor allows to almost instantly respond after receiving a query. Thanks to this in high baud rates the respond time of the device is very short. If the **ProSens** cooperates with a device (e.g. converter) which is not designed for this baud rates then the user should add an additional delay in order for transmission to work properly. There are following options available:

"Std" - answer as quick as possible, no additional delay

"10 c"
"20 c"
"50 c"
"100 c"
"200 c" - answer delayed of 10, 20, 50, 100 or 200 charts respectively, where one character time depends on selected baud rate

In the most cases "**Resp. delay**" parameter should be set on "**Std**" (no additional delay). For some converters which are not able to transmit with higher speeds than 19200 bit/s the "**Resp. delay**" parameter should be set as it is shown in **Tab.7.1**. When **ProSens** is cooperating with converters of other manufacturers the "**Resp. delay**" parameter should be adjusted experimentally on baud which will not generate any transmission errors.

"Baud rate" parameter	"38400"	"57600"	"115200"
"Resp. delay" parameter	"10c"	"20c"	"50c"

Tab.7.1. Settings of "**Resp. delay**" parameter

7.3.7. "Language" menu

"**Selected**" - parameter which selects a language of the menu,

7.3.8. "Information" view

It contains an information about the device such as: Software version, External temperature, Time of work and Hardware configuration.

7.3.9. "Default settings" option

This setting allows to restore the factory settings of the device. To get the access to this option a special password is required: "5465" next the device displays an acknowledge question: "**Save changes?**". Press [**ENTER**] to acknowledge the restoring of the factory settings or [**ESC**] to cancel.

7.3.10. "Service menu" option

This menu contains the parameters for authorized service only. To enter this menu proper service password must be entered. Improper settings can causes of damage of the device.

7.3.11. "Quick Access" menu

Menu which contains settings for quick access for thresholds and hysteresis of the relay outputs (if the device is equipped with at least one) without knowing the user's password. Depending on hardware configuration this menu contains:

"**DO1**" - preview and edition options for relay 1 parameters from measurement view,
- "OFF" - preview of the relay settings is inactive,
- "ON" - preview of the relay settings is active,
- "editable" - relay settings can be edited,

"**DO2**" - preview and edition options for relay 1 parameters from measurement view,
- "OFF" - preview of the relay settings is inactive,
- "ON" - preview of the relay settings is active,
- "editable" - relay settings can be edited,

Quick Access to relay parameters takes place by pressing **[ENTER]** button while measurement view is displayed. When this option for a relay is on the during displaying its parameters in right up corner of the screen a padlock is displayed.

7.4. MENU STRUCTURE

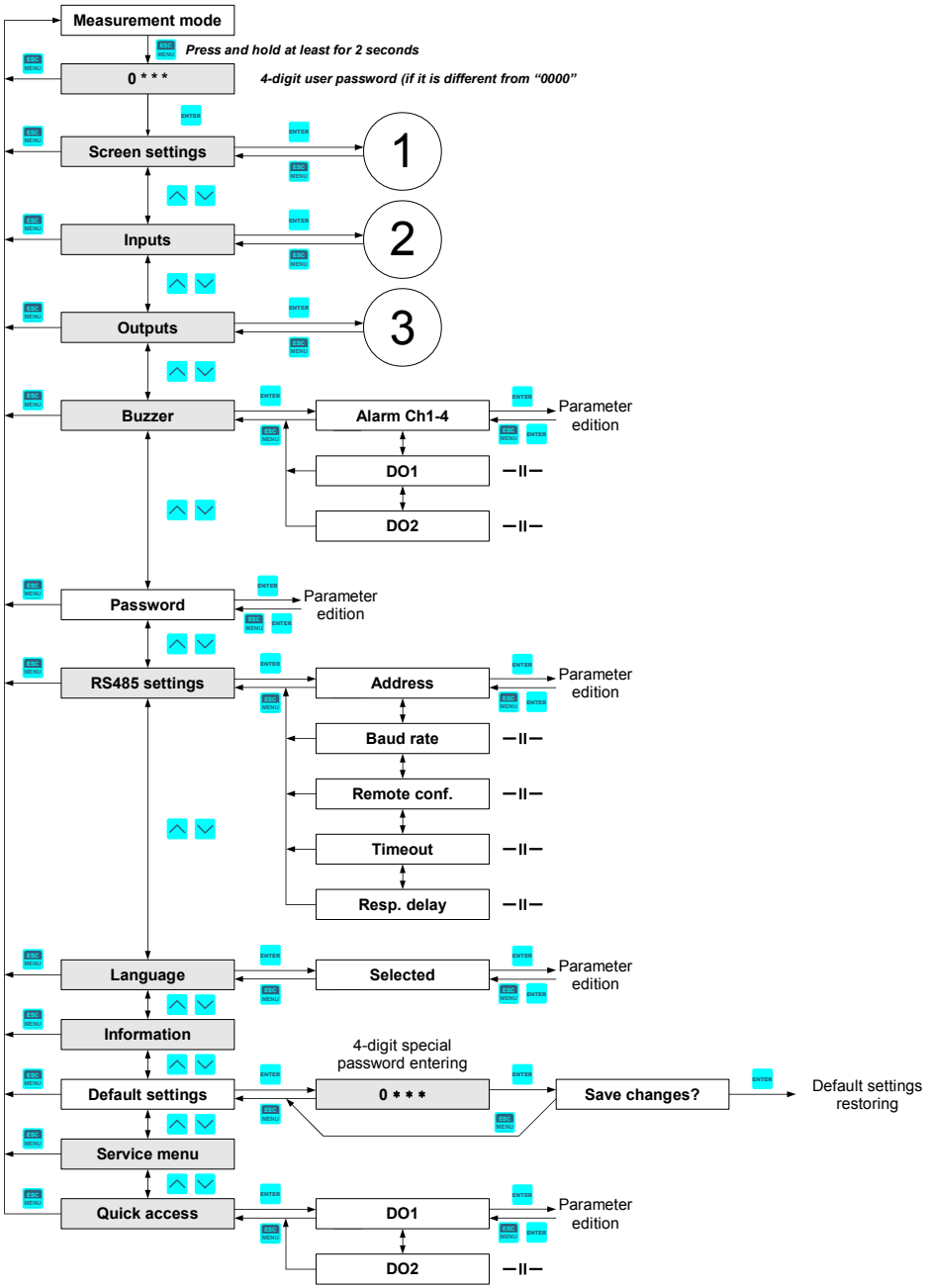

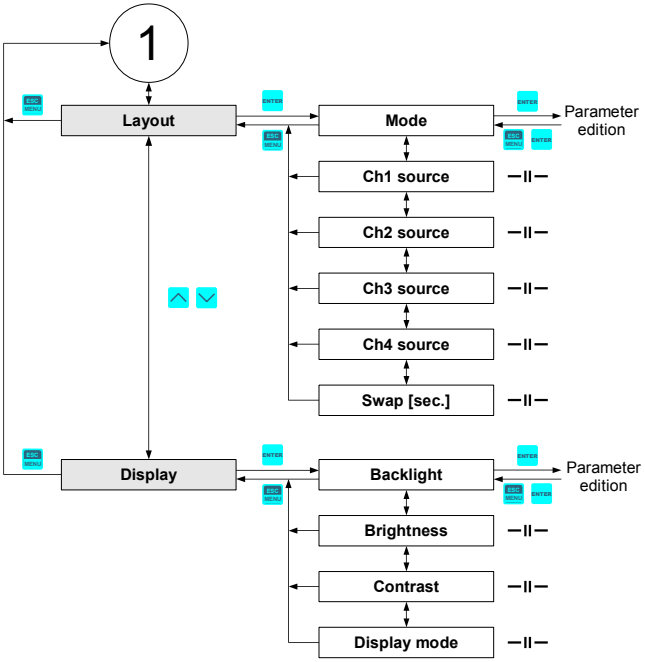
1
Layout
Mode
Parameter edition
Ch1 source
Ch2 source
Ch3 source
Ch4 source
Swap [sec.]
Display
Backlight
Parameter edition
Brightness
Contrast
Display mode

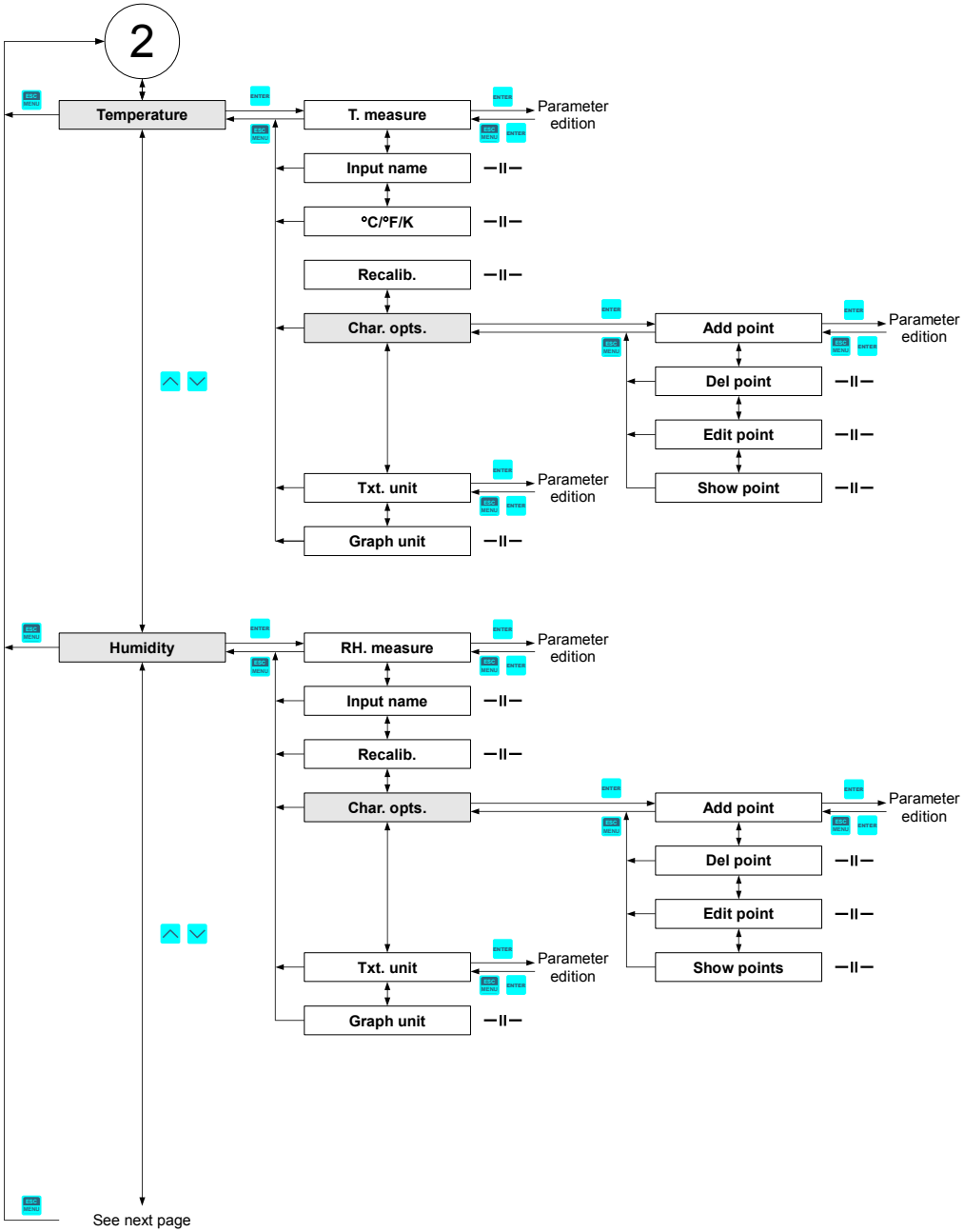
2
Temperature
T. measure
Parameter edition
Input name
°C/°F/K
Recalib.
Char. opts.
Add point
Parameter edition
Del point
Edit point
Show point
Txt. unit
Parameter edition
Graph unit
Humidity
RH. measure
Parameter edition
Input name
Recalib.
Char. opts.
Add point
Parameter edition
Del point
Edit point
Show points
Txt. unit
Parameter edition
Graph unit
See next page

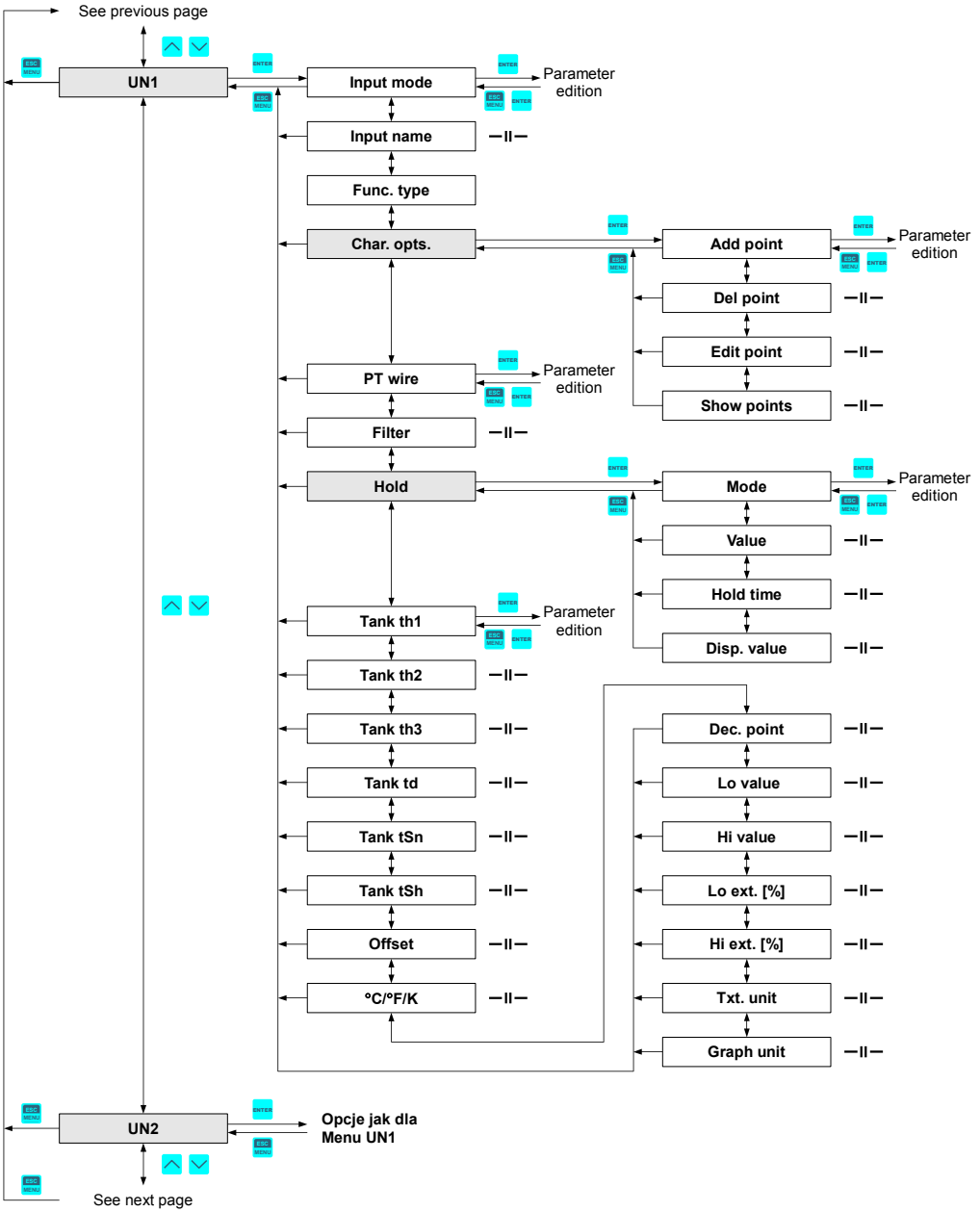
See previous page
UN1
Input mode
Parameter edition
Input name
Func. type
Char. opts.
Add point
Del point
Edit point
Show points
PT wire
Filter
Hold
Mode
Value
Hold time
Disp. value
Tank th1
Tank th2
Tank th3
Tank td
Tank tSn
Tank tSh
Offset
°C/°F/K
Dec. point
Lo value
Hi value
Lo ext. [%]
Hi ext. [%]
Txt. unit
Graph unit
UN2
Opcje jak dla Menu UN1
See next page

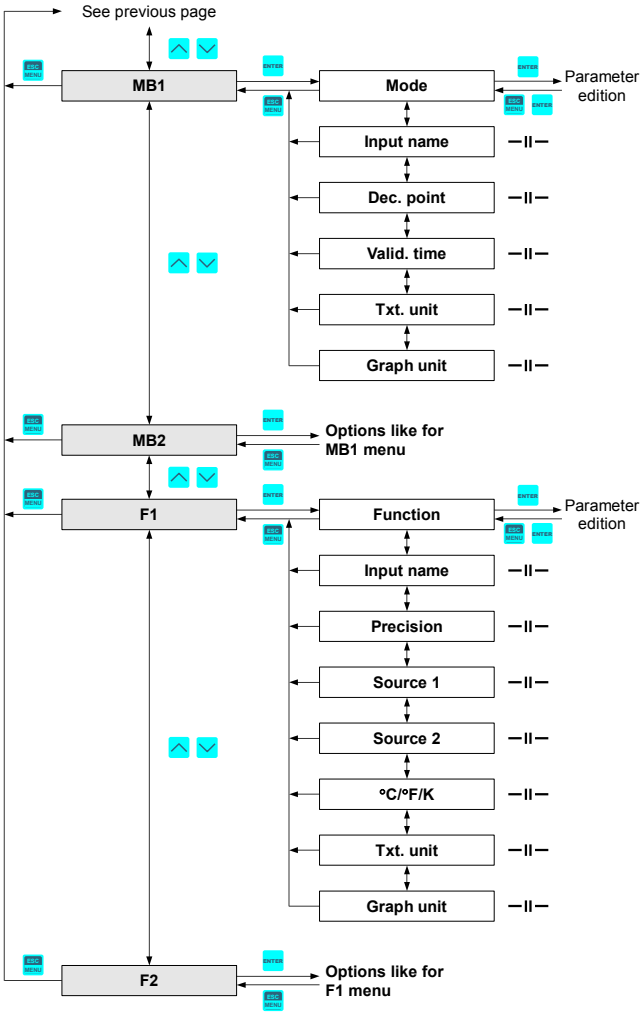
See previous page
MB1
Mode
Parameter edition
Input name
Dec. point
Valid. time
Txt. unit
Graph unit
MB2
Options like for MB1 menu
F1
Function
Parameter edition
Input name
Precision
Source 1
Source 2
°C/°F/K
Txt. unit
Graph unit
F2
Options like for F1 menu

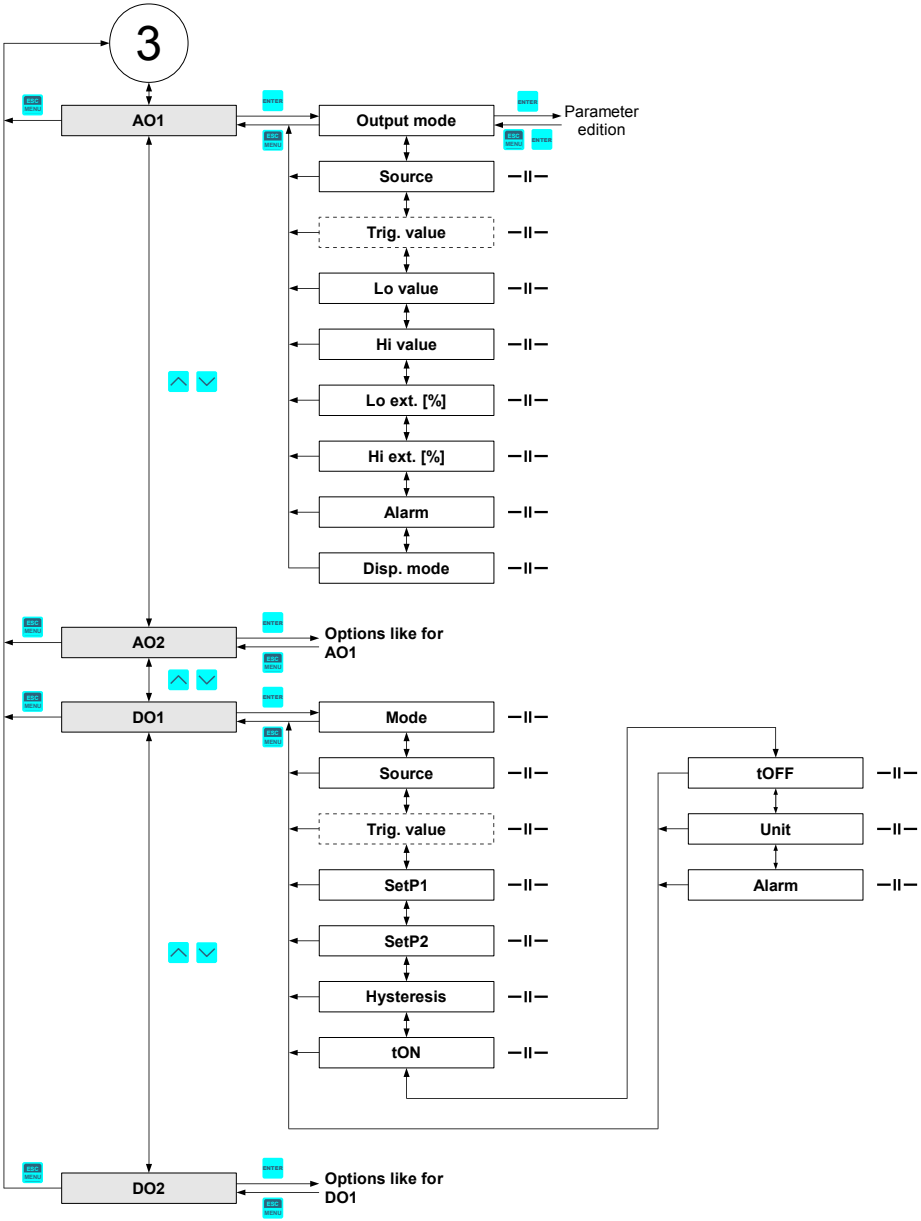
3
AO1
Output mode
Parameter edition
Source
Trig. value
Lo value
Hi value
Lo ext. [%]
Hi ext. [%]
Alarm
Disp. mode
AO2
Options like for AO1
DO1
Mode
Source
Trig. value
SetP1
SetP2
Hysteresis
tON
tOFF
Unit
Alarm
DO2
Options like for DO1

8. THE MODBUS PROTOCOL HANDLING

Transmission parameters: 1 start bit, 8 data bits, 1 or 2 stop bit (2 bits are send, 1 and 2 bits are accepted when receive), no parity control
Baud rate: selectable from: 1200 to 115200 bits/second
Transmission protocol: MODBUS RTU compatible

The device parameters and display value are available via RS-485 interface, as HOLDING-type registers (numeric values are given in U2 code) of Modbus RTU protocol. The registers (or groups of the registers) can be read by 03h function, and wrote by 06h (single registers) or 10h (group of the registers) accordingly to Modbus RTU specification. Maximum group size for 03h and 10h functions can not exceeds 16 registers (for single frame).

The device interprets the broadcast messages, but then do not sends the answers.

8.1. LIST OF REGISTERS

Register	*Write*	*Range*	*Register description*
0001h	No	-9999 ÷ 9999	Real measurement value of channel **1** (no decimal point)
0002h	No	0h, 10h, 20h, 60h, A0h, C0h, F0h, FFh	The status of the measurement (channel **1**): **0h –** data valid; **10h** – error of user characteristic; **20h** – waiting for the first measure; **60h** – bottom border of the measurement range is exceeded; **A0h –** top border of the measurement range is exceeded; **C0h** – sensor failure; **F0h** – source of the channel is off; **FFh –** the channel is off
0003h	No	-9999 ÷ 9999	Peak (drop) value of the channel's **1** source (no decimal point) Only valid for **UN** source! In other cases measurement value.
0004h	No	0 ÷ 3	"**Dec. point**" parameter of the channels source: **0 -** " 0"; **1 -** " 0.0"; **2 -** " 0.00"; **3 -** "0.000"
0005h	No	-9999 ÷ 9999	Real measurement value of channel **2** (no decimal point)
0006h	No	0h, 10h, 20h, 60h, A0h, C0h, F0h, FFh	The status of the measurement (channel **2**): **0h –** data valid; **10h** – error of user characteristic; **20h** – waiting for the first measure; **60h** – bottom border of the measurement range is exceeded; **A0h –** top border of the measurement range is exceeded; **C0h** – sensor failure; **F0h** – source of the channel is off; **FFh –** the channel is off
0007h	No	-9999 ÷ 9999	Peak (drop) value of the channel's **2** source (no decimal point) Only valid for **UN** source! In other cases measurement value.
0008h	No	0 ÷ 3	"**Dec. point**" parameter of the channels source: **0 -** " 0"; **1 -** " 0.0"; **2 -** " 0.00"; **3 -** "0.000"
0009h	No	-9999 ÷ 9999	Real measurement value of channel **3** (no decimal point)

Register	Write	Range	Register description
000Ah	No	0h, 10h, 20h, 60h, A0h, C0h, F0h, FFh	The status of the measurement (channel **3**): **0h –** data valid; **10h** – error of user characteristic; **20h** – waiting for the first measure; **60h** – bottom border of the measurement range is exceeded; **A0h –** top border of the measurement range is exceeded; **C0h** – sensor failure; **F0h** – source of the channel is off; **FFh –** the channel is off
000Bh	No	-9999 ÷ 9999	Peak (drop) value of the channel's **3** source (no decimal point) Only valid for **UN** source! In other cases measurement value.
000Ch	No	0 ÷ 3	"**Dec. point**" parameter of the channels source: **0 -** " 0"; **1 -** " 0.0"; **2 -** " 0.00"; **3 -** "0.000"
000Dh	No	-9999 ÷ 9999	Real measurement value of channel **4** (no decimal point)
000Eh	No	0h, 10h, 20h, 60h, A0h, C0h, F0h, FFh	The status of the measurement (channel **4**): **0h –** data valid; **10h** – error of user characteristic; **20h** – waiting for the first measure; **60h** – bottom border of the measurement range is exceeded; **A0h –** top border of the measurement range is exceeded; **C0h** – sensor failure; **F0h** – source of the channel is off; **FFh –** the channel is off
000Fh	No	-9999 ÷ 9999	Peak (drop) value of the channel's **4** source (no decimal point) Only valid for **UN** source! In other cases measurement value.
0011h	No	0 ÷ 3	"**Dec. point**" parameter of the channels source: **0 -** " 0"; **1 -** " 0.0"; **2 -** " 0.00"; **3 -** "0.000"
0013h	No	-40 ÷ 85	Temperature inside device housing expressed by 1°C
0014h	Yes	see description	State of the relays and alarm LED in binary format (1 – on, 0 – off): **00000000 000c00ba** **a** – relay R1; **b** – relay R2; **c** – alarm LED; If written, only a and b bits are important (others are ignored). These bits allows user to control the relays via RS-485 interface
0015h [1)]	Yes	0h ÷ 1800h	State of active current output **1**, expressed in 1/256 mA – it means that high byte express integer part, and low byte fractional part of desired output current
	Yes	2CCh÷1800h	State of passive current output **1**, expressed in 1/256 mA – it means that high byte express integer part, and low byte fractional part of desired output current
	Yes	0h ÷ 1600h	State of active voltage output **1**, expressed in 1/512 V – it means that high byte express integer part, and low byte fractional part of desired output voltage
0016h [1)]	Yes	0h ÷ 1800h	State of active current output **2**, expressed in 1/256 mA – it means that high byte express integer part, and low byte fractional part of desired output current
	Yes	2CCh÷1800h	State of passive current output **2**, expressed in 1/256 mA – it means that high byte express integer part, and low byte fractional part of desired output current
	Yes	0h ÷ 1600h	State of active voltage output **2**, expressed in 1/512 V – it means that high byte express integer part, and low byte fractional part of desired output voltage

Register	Write	Range	Register description
0020h [2)]	Yes	0 ÷ 199	Device address
0021h	No	3010h	Device identification code (ID)
0022h [3)]	Yes	0 ÷ 7	"**Baud rate**" parameter in "**RS485 settings**" menu; **0** - 1200 bit/sec; **1** - 2400 bit/sec; **2** - 4800 bit/sec; **3** - 9600 bit/sec; **4** - 19200 bit/sec; **5** - 38400 bit/sec; **6** - 57600 bit/sec; **7 –** 115200 bit/sec
0023h [4)]	Yes	0 ÷ 1	"**Remote conf.**" parameter in "**RS485 settings**" menu (permission to write registers via RS-485 interface); **0** - write denied ; **1** - write allowed
0025h	Yes	0 ÷ 5	"**Resp. delay**" parameter in "**RS485 settings**" menu (additional response delay); **0** - no additional delay; **1** - "**10c**" option; **2** - "**20c**" option; **3** - "**50c**" option; **4** - "**100c**" option; **5** - "**200c**" option
0027h	Yes	0 ÷ 99	"Timeout" parameter in "**RS485 settings**" menu (maximum delay between received frames); **0** - no delay checking; **1** ÷ **99** - maximum delay expressed in seconds
0028h	Yes	0 ÷ 1	"**Alarm Ch1-4**" parameter in "**Buzzer**" menu: **0** - off; **1** - on
0029h	Yes	0 ÷ 1	"**DO1 alarm**" parameter in "**Buzzer**" menu: **0** - off; **1** - on
002Ah	Yes	0 ÷ 1	"**DO2 alarm**" parameter in "**Buzzer**" menu: **0** - off; **1** - on
0030h	Yes	-9999 ÷ 9999	"**SetP1**" parameter for relay **1** in "**DO1**" submenu, no decimal point included
0031h	Yes	-9999 ÷ 9999	"**SetP2**" parameter for relay **1** in "**DO1**" submenu, no decimal point included
0032h	Yes	0 ÷ 999	"**Hysteresis**" parameter for relay **1** in "**DO1**" submenu, no decimal point included
0033h	Yes	0 ÷ 5	"**Mode**" parameter for relay **1** in "**DO1**" submenu: **0** - "**no action**" mode; **1** - "**ON**" mode; **2** - "**OFF**" mode; **3** - "**IN**" mode; **4** - "**OUT**" mode; **5** - "**modbus**" mode
0034h	Yes	1 ÷ 4	"**Source**" parameter for relay **1** in "**DO1**" submenu: **1** – channel 1; **2** – channel 2; **3** – channel 3; **4** – channel 4
0035h	Yes	0 ÷ 999	"**tON**" parameter for relay **1** in "**DO1**" submenu, expressed in tenth of seconds or tenth of minutes (depend on "**unit**" parameter - register 37h)
0036h	Yes	0 ÷ 999	"**tOFF**" parameter for relay **1** in "**DO1**" submenu, expressed in tenth of seconds or tenth of minutes (depend on "**unit**" parameter - register 37h)
0037h	Yes	0 ÷ 1	"**Unit**" parameter for relay **1** in "**DO1**" submenu: **0** - seconds; **1** - minutes
0038h	Yes	0 ÷ 2	"**Alarm**" parameter for relay **1** in "**DO1**" submenu: **0** - no changes; **1** - on; **2** - off

Register	Write	Range	Register description
0039h	Yes [6]	0 ÷ 1 [6]	"**Trig. value**" parameter for relay **1** in "**DO1**" submenu: **0** – current ("**real**") value triggers the relay; **1 –** "**hold**" value triggers the relay; (valid only for UN source)
003Ah	Yes	0 ÷ 2	"**DO1**" parameter in "**Quick access**" menu: **0** – quick access menu inactive; **1** – quick access menu is visible; **2** – parameters are visible and editable
0040h	Yes	-9999 ÷ 9999	"**SetP1**" parameter for relay **2** in "**DO1**" submenu, no decimal point included
0041h	Yes	-9999 ÷ 9999	"**SetP2**" parameter for relay **2** in "**DO1**" submenu, no decimal point included
0042h	Yes	0 ÷ 999	"**Hysteresis**" parameter for relay **2** in "**DO1**" submenu, no decimal point included
0043h	Yes	0 ÷ 5	"**Mode**" parameter for relay **2** in "**DO1**" submenu: **0** - "**no action**" mode; **1** - "**ON**" mode; **2** - "**OFF**" mode; **3** - "**IN**" mode; **4** - "**OUT**" mode; **5** - "**modbus**" mode
0044h	Yes	1 ÷ 4	"**Source**" parameter for relay **2** in "**DO1**" submenu: **1** – channel 1; **2** – channel 2; **3** – channel 3; **4** – channel 4
0045h	Yes	0 ÷ 999	"**tON**" parameter for relay **2** in "**DO1**" submenu, expressed in tenth of seconds or tenth of minutes (depend on "**unit**" parameter - register 37h)
0046h	Yes	0 ÷ 999	"**tOFF**" parameter for relay **2** in "**DO1**" submenu, expressed in tenth of seconds or tenth of minutes (depend on "**unit**" parameter - register 37h)
0047h	Yes	0 ÷ 1	"**Unit**" parameter for relay **2** in "**DO1**" submenu: **0** - seconds; **1** - minutes
0048h	Yes	0 ÷ 2	"**Alarm**" parameter for relay **2** in "**DO1**" submenu: **0** - no changes; **1** - on; **2** - off
0049h	Yes [6]	0 ÷ 1 [6]	"**Trig. value**" parameter for relay **2** in "**DO1**" submenu: **0** – current ("**real**") value triggers the relay; **1 –** "**hold**" value triggers the relay; (valid only for UN source)
004Ah	Yes	0 ÷ 2	"**DO2**" parameter in "**Quick access**" menu: **0** – quick access menu inactive; **1** – quick access menu is visible; **2** – parameters are visible and editable
0070h	Yes	0 ÷ 3	"**Output mode**" parameter in "**AO1**" submenu (active current output mode): **0 –** current output disabled; **1** – current output enabled with "**4-20 mA**" mode; **2** – current output enabled with "**0-20 mA**" mode; **3** – current output controlled via RS-485 interface
	Yes	0 ÷ 2	"**Output mode**" parameter in "**AO1**" submenu (passive current output mode): **0 –** current output disabled; **1 –** current output enabled with "**4-20 mA**" mode; **2** - current output controlled via RS-485 interface

Register	Write	Range	Register description
	Yes	0 ÷ 5	"**Output mode**" parameter in "**AO1**" submenu (active voltage output mode): **0 –** voltage output disabled; **1 –** voltage output enabled with "**0-5 V**" mode; **2 –** voltage output enabled with "**1-5 V**" mode; **3 –** voltage output enabled with "**0-10 V**" mode; **4 –** voltage output enabled with "**2-10 V**" mode; **5** - voltage output controlled via RS-485 interface
0071h	Yes	1 ÷ 4	"**Source**" parameter in "**AO1**" submenu: **1 –** channel 1; **2** – channel 2; **3** – channel 3; **4** – channel 4
0072h	Yes	-9999 ÷ 9999	"**Lo value**" parameter in "**AO1**" submenu, no decimal point included
0073h	Yes	-9999 ÷ 9999	"**Hi value**" parameter in "**AO1**" submenu, no decimal point included
0074h	Yes	0 ÷ 999	"**Lo ext. [%]**" parameter in "**AO1**" submenu, for active current output and active voltage output, expressed in 0.1%
	Yes	0 ÷ 299	"**Lo ext. [%]**" parameter in "**AO1**" submenu for passive current output, expressed in 0.1%
0075h	Yes	0 ÷ 199	"**Hi ext. [%]**" parameter in "**AO1**" submenu for active and passive current output, expressed in 0.1%
	Yes	0 ÷ 99	"**Hi ext. [%]**" parameter in "**AO1**" submenu for active voltage output, expressed in 0.1%
0076h	Yes	0 ÷ 3	"**Alarm**" parameter in "**AO1**" submenu (active current output value on critical exception): **0** - "no change"; **1** - "22.1 mA"; **2** - "3.4 mA"; **3** - "0 mA"
	Yes	0 ÷ 2	"**Alarm**" parameter in "**AO1**" submenu (passive current output value on critical exception): **0** - "no change"; **1** - "22.1 mA"; **2** - "3.4 mA"
	Yes	0 ÷ 5	"**Alarm**" parameter in "**AO1**" submenu (active voltage output value on critical exception): **0** - "no change"; **1** - "11 V"; **2** - "5.5"; **3** - "1.2 V"; **4** - "0.6 V"; **5** - "0 V"
0077h	Yes [6)]	0 ÷ 1 [6)]	"**Trig. value**" parameter in "**AO1**" submenu: **0** - "real" value triggers output; **1** - "hold" value triggers output
0078h	Yes	0 ÷ 1	"**Disp. mode**" parameter in "**AO1**" submenu: **0 –** output value displayed in mA (or V); **1** – output value displayed as **%** of the output range
0080h	Yes	0 ÷ 3	"**Output mode**" parameter in "**AO2**" submenu (active current output mode): **0 –** current output disabled; **1** – current output enabled with "**4-20 mA**" mode; **2** – current output enabled with "**0-20 mA**" mode; **3** – current output controlled via RS-485 interface
	Yes	0 ÷ 2	"**Output mode**" parameter in "**AO2**" submenu (passive current output mode): **0 –** current output disabled; **1 –** current output enabled with "**4-20 mA**" mode; **2** - current output controlled via RS-485 interface
	Yes	0 ÷ 5	"**Output mode**" parameter in "**AO2**" submenu (active voltage output mode): **0 –** voltage output disabled; **1 –** voltage output enabled with "**0-5 V**" mode; **2 –** voltage output enabled with "**1-5 V**" mode; **3 –** voltage output enabled with "**0-10 V**" mode; **4 –** voltage output enabled with "**2-10 V**" mode; **5** - voltage output controlled via RS-485 interface

Register	Write	Range	Register description
0081h	Yes	1 ÷ 4	"**Source**" parameter in "**AO2**" submenu: **1 –** channel 1; **2** – channel 2; **3** – channel 3; **4** – channel 4
0082h	Yes	-9999 ÷ 9999	"**Lo value**" parameter in "**AO2**" submenu, no decimal point included
0083h	Yes	-9999 ÷ 9999	"**Hi value**" parameter in "**AO2**" submenu, no decimal point included
0084h	Yes	0 ÷ 999	"**Lo ext. [%]**" parameter in "**AO2**" submenu, for active current output and active voltage output, expressed in 0.1%
	Yes	0 ÷ 299	"**Lo ext. [%]**" parameter in "**AO2**" submenu for passive current output, expressed in 0.1%
0085h	Yes	0 ÷ 199	"**Hi ext. [%]**" parameter in "**AO2**" submenu for active and passive current output, expressed in 0.1%
	Yes	0 ÷ 99	"**Hi ext. [%]**" parameter in "**AO2**" submenu for active voltage output, expressed in 0.1%
0086h	Yes	0 ÷ 3	"**Alarm**" parameter in "**AO2**" submenu (active current output value on critical exception): **0** - "no change"; **1** - "22.1 mA"; **2** - "3.4 mA"; **3** - "0 mA"
	Yes	0 ÷ 2	"**Alarm**" parameter in "**AO2**" submenu (passive current output value on critical exception): **0** - "no change"; **1** - "22.1 mA"; **2** - "3.4 mA"
	Yes	0 ÷ 5	"**Alarm**" parameter in "**AO2**" submenu (active voltage output value on critical exception): **0** - "no change"; **1** - "11 V"; **2** - "5.5"; **3** - "1.2 V"; **4** - "0.6 V"; **5** - "0 V"
0087h	Yes [6)]	0 ÷ 1 [6)]	"**Trig. value**" parameter in "**AO2**" submenu: **0** - "real" value triggers output; **1** - "hold" value triggers output
0088h	Yes	0 ÷ 1	"**Disp. mode**" parameter in "**AO2**" submenu: **0 –** output value displayed in mA (or V); **1** – output value displayed as **%** of the output range
00A0h	Yes [6)]	0 ÷ 21 [6)]	"**Input type**" parameter in "**UN1**" menu (nominal input range): **0** - input disabled; **1** - 0-20 mA; **2** - 4-20 mA; **3** - 0-5 V; **4** - 1-5 V; **5** - 0-10 V; **6** - 2-10 V; **7** - 0-60 mV; **8** - 0-75 mV; **9** - 0-100 mV; **10** - 0-150 mV; **11** - Pt-100; **12** - Pt-500; **13** - Pt-1000 **14** - thermocouple input K; **15** - thermocouple input S; **16** - thermocouple input J; **17** - thermocouple input T; **18** - thermocouple input N; **19 –** thermocouple input R; **20** - thermocouple input B; **21** - thermocouple input E
00A1h	Yes [6)]	0 ÷ 5 [6)]	"**Conv. cahr.**" parameter in "**UN1**" menu (characteristic type) **0** - linear ; **1** - square; **2** - square root; **3** - user defined; **4** - volume characteristics of a cylindrical tank in the vertical position; **5** - volume characteristics of a cylindrical tank in the horizontal position
00A2h	Yes [6)]	0 ÷ 255 [6)]	"**Filter**" parameter in "**UN1**" submenu (time constant in seconds)
00A3h	Yes [6)]	0 ÷ 3 [6)]	"**Dec. point**" parameter in "**UN1**" submenu: **0** - " 0"; **1** - " 0.0"; **2** - " 0.00"; **3** - "0.000"
00A4h	Yes [6)]	-9999 ÷ 9999 [6)]	"**Lo value**" parameter in "**UN1**" submenu, no decimal point included

Register	Write	Range	Register description
00A5h	Yes [6]	-9999 ÷ 9999 [6]	"**Hi value**" parameter in "**UN1**" submenu, no decimal point included
00A6h	Yes [6]	0 ÷ 999 [6]	"**Lo ext. [%]**" parameter in "**UN1**" submenu, expressed in 0.1%
00A7h	Yes [6]	0 ÷ 199 [6]	"**Hi ext. [%]**" parameter in "**UN1**" submenu, expressed in 0.1%
00A8h	Yes [6]	-99 ÷ 99 [6]	"**Offset**" parameter in "**UN1**" submenu (shift of measurement scale), expressed by 0.1°C (for RTD input) or by 1.0°C (for TC input)
00A9h	Yes [6]	1 ÷ 2 [6]	"**PT wire**" parameter in "**UN1**" submenu (RTD input connection method): **1** - "3 wire"; **2** - "2 wire"
00AAh	Yes [6]	0 ÷ 2 [6]	"**°C/°F/K**" parameter in "**UN1**" submenu: **0** - "Celsius"; **1** - "Fahrenheit"; **2** - "Kelvin"
00ABh	Yes [6]	0 ÷ 9999 [6]	"**Tank th1**" parameter in "**UN1**" submenu, no decimal point included
00ACh	Yes [6]	0 ÷ 9999 [6]	"**Tank th2**" parameter in "**UN1**" submenu, no decimal point included
00ADh	Yes [6]	0 ÷ 9999 [6]	"**Tank th3**" parameter in "**UN1**" submenu, no decimal point included
00AEh	Yes [6]	1 ÷ 9999 [6]	"**Tank td**" parameter in "**UN1**" submenu, no decimal point included
00AFh	Yes [6]	0 ÷ 9999 [6]	"**Tank tSn**" parameter in "**UN1**" submenu, no decimal point included
00B0h	Yes [6]	0 ÷ 9999 [6]	"**Tank tSh**" parameter in "**UN1**" submenu, no decimal point included
00B1h	Yes [6]	0 ÷ 1 [6]	"**Mode**" parameter in "**Hold**" submenu of UN1 (type of detected changes): **0** - peaks; **1** - drops
00B2h	Yes [6]	0 ÷ 9999 [6]	"**Value**" parameter in "**Hold**" submenu of UN1 (minimum detectable change, no decimal point included)
00B3h	Yes [6]	0 ÷ 199 [6]	"**Time**" parameter in "**Hold**" submenu of UN1, maximum peaks' (or drops') display time expressed in tenth parts of a second
00B4h	Yes [6]	0 ÷ 1 [6]	"**Disp. value**" parameter in "**Hold**" submenu of UN1: **0** - "**real**" mode ; **1** - "**hold**" mode
00B5h	Yes [6]	0 ÷ 17 [6]	"**Graph. unit**" parameter in "**UN1**" submenu: **0** – same as text unit; **1** - "%"; **2** - "mA"; **3** - "A"; **4** - "mV"; **5** - "V"; **6** - "□C"; **7** - "□F"; **8** - "K"; **9** - "Hz"; **10** - "kHz"; **11** - "hPa"; **12** - "MPa"; **13** - "bar"; **14** - "m/s"; **15** - "m^3"; **16** - "l/min"; **17** - "user"
00B6h	Yes [6]	20h ÷ FFh [6]	**First** character of **UN1** input name, in ASCII code
00B7h	Yes [6]	20h ÷ FFh [6]	**Second** character of **UN1** input name, in ASCII code
00B8h	Yes [6]	20h ÷ FFh [6]	**Third** character of **UN1** input name, in ASCII code
00B9h	Yes [6]	20h ÷ FFh [6]	**Fourth** character of **UN1** input name, in ASCII code
00BAh	Yes [6]	20h ÷ FFh [6]	**Fifth** character of **UN1** input name, in ASCII code
00BBh	Yes [6]	20h ÷ FFh [6]	**Sixth** character of **UN1** input name, in ASCII code
00BCh	Yes [6]	20h ÷ FFh [6]	**First** character of text unit for **UN1**, in ASCII code
00BDh	Yes [6]	20h ÷ FFh [6]	**Second** character of text unit for **UN1**, in ASCII code
00BEh	Yes [6]	20h ÷ FFh [6]	**Third** character of text unit for **UN1**, in ASCII code

Register	Write	Range	Register description
00BFh	Yes [6]	20h ÷ FFh [6]	**Fourth** character of text unit for **UN1**, in ASCII code
00D0h	Yes [7]	0 ÷ 21 [7]	"**Input type**" parameter in "**UN2**" menu (nominal input range): **0** - input disabled; **1** - 0-20 mA; **2** - 4-20 mA; **3** - 0-5 V; **4** - 1-5 V; **5** - 0-10 V; **6** - 2-10 V; **7** - 0-60 mV; **8** - 0-75 mV; **9** - 0-100 mV; **10** - 0-150 mV; **11** - Pt-100; **12** - Pt-500; **13** - Pt-1000 **14** - thermocouple input K; **15** - thermocouple input S; **16** - thermocouple input J; **17** - thermocouple input T; **18** - thermocouple input N; **19 –** thermocouple input R; **20** - thermocouple input B; **21** - thermocouple input E
00D1h	Yes [7]	0 ÷ 5 [7]	"**Conv. cahr.**" parameter in "**UN2**" menu (characteristic type) **0** - linear ; **1** - square; **2** - square root; **3** - user defined; **4** - volume characteristics of a cylindrical tank in the vertical position; **5** - volume characteristics of a cylindrical tank in the horizontal position
00D2h	Yes [7]	0 ÷ 255 [7]	"**Filter**" parameter in "**UN2**" submenu (time constant in seconds)
00D3h	Yes [7]	0 ÷ 3 [7]	"**Dec. point**" parameter in "**UN2**" submenu: **0** - " 0"; **1** - " 0.0"; **2** - " 0.00"; **3** - "0.000"
00D4h	Yes [7]	-9999 ÷ 9999 [7]	"**Lo value**" parameter in "**UN2**" submenu, no decimal point included
00D5h	Yes [7]	-9999 ÷ 9999 [7]	"**Hi value**" parameter in "**UN2**" submenu, no decimal point included
00D6h	Yes [7]	0 ÷ 999 [7]	"**Lo ext. [%]**" parameter in "**UN2**" submenu, expressed in 0.1%
00D7h	Yes [7]	0 ÷ 199 [7]	"**Hi ext. [%]**" parameter in "**UN2**" submenu, expressed in 0.1%
00D8h	Yes [7]	-99 ÷ 99 [7]	"**Offset**" parameter in "**UN2**" submenu (shift of measurement scale), expressed by 0.1°C (for RTD input) or by 1.0°C (for TC input)
00D9h	Yes [7]	1 ÷ 2 [7]	"**PT wire**" parameter in "**UN2**" submenu (RTD input connection method): **1** - "3 wire"; **2** - "2 wire"
00DAh	Yes [7]	0 ÷ 2 [7]	"**°C/°F/K**" parameter in "**UN2**" submenu: **0** - "Celsius"; **1** - "Fahrenheit"; **2** - "Kelvin"
00DBh	Yes [7]	0 ÷ 9999 [7]	"**Tank th1**" parameter in "**UN2**" submenu, no decimal point included
00DCh	Yes [7]	0 ÷ 9999 [7]	"**Tank th2**" parameter in "**UN2**" submenu, no decimal point included
00DDh	Yes [7]	0 ÷ 9999 [7]	"**Tank th3**" parameter in "**UN2**" submenu, no decimal point included
00DEh	Yes [7]	1 ÷ 9999 [7]	"**Tank td**" parameter in "**UN2**" submenu, no decimal point included
00DFh	Yes [7]	0 ÷ 9999 [7]	"**Tank tSn**" parameter in "**UN2**" submenu, no decimal point included
00E0h	Yes [7]	0 ÷ 9999 [7]	"**Tank tSh**" parameter in "**UN2**" submenu, no decimal point included
00E1h	Yes [7]	0 ÷ 1 [7]	"**Mode**" parameter in "**Hold**" submenu of UN2 (type of detected changes): **0** - peaks; **1** - drops
00E2h	Yes [7]	0 ÷ 9999 [7]	"**Value**" parameter in "**Hold**" submenu of UN2 (minimum detectable change, no decimal point included)
00E3h	Yes [7]	0 ÷ 199 [7]	"**Time**" parameter in "**Hold**" submenu of UN2, maximum peaks' (or drops') display time expressed in tenth parts of a second

Register	Write	Range	Register description
00E4h	Yes [7]	0 ÷ 1 [7]	"**Disp. value**" parameter in "**Hold**" submenu of UN2: **0** - "**real**" mode ; **1** - "**hold**" mode
00E5h	Yes [7]	0 ÷ 17 [7]	"**Graph. unit**" parameter in "**UN2**" submenu: **0** – same as text unit; **1** - "%"; **2** - "mA"; **3** - "A"; **4** - "mV"; **5** - "V"; **6** - "°C"; **7** - "°F"; **8** - "K"; **9** - "Hz"; **10** - "kHz"; **11** - "hPa"; **12** - "MPa"; **13** - "bar"; **14** - "m/s"; **15** - "m^3"; **16** - "l/min"; **17** - "user"
00E6h	Yes [7]	20h ÷ FFh [7]	**First** character of **UN2** input name, in ASCII code
00E7h	Yes [7]	20h ÷ FFh [7]	**Second** character of **UN2** input name, in ASCII code
00E8h	Yes [7]	20h ÷ FFh [7]	**Third** character of **UN2** input name, in ASCII code
00E9h	Yes [7]	20h ÷ FFh [7]	**Fourth** character of **UN2** input name, in ASCII code
00EAh	Yes [7]	20h ÷ FFh [7]	**Fifth** character of **UN2** input name, in ASCII code
00EBh	Yes [7]	20h ÷ FFh [7]	**Sixth** character of **UN2** input name, in ASCII code
00ECh	Yes [7]	20h ÷ FFh [7]	**First** character of text unit for **UN2**, in ASCII code
00EDh	Yes [7]	20h ÷ FFh [7]	**Second** character of text unit for **UN2**, in ASCII code
00EEh	Yes [7]	20h ÷ FFh [7]	**Third** character of text unit for **UN2**, in ASCII code
00EFh	Yes [7]	20h ÷ FFh [7]	**Fourth** character of text unit for **UN2**, in ASCII code
0100h	Yes [8]	0 ÷ 1 [8]	"**T. measure**" parameter in "**Temperature**" submenu: **0** – input off; **1** – input active
0101h	Yes [8]	0 ÷ 2 [8]	"**°C/°F/K**" parameter in "**Temperature**" submenu: **0** - "Celsius"; **1** - "Fahrenheit"; **2** - "Kelvin"
0102h	Yes [8]	0 ÷ 1 [8]	"**Recalib.**" parameter in "**Temperature**" submenu: **0** – recalibration active; **1** – no recalibration
0103h	Yes [8]	0 ÷ 17 [8]	"**Graph. unit**" parameter in "**Temperature**" submenu: **0** – same as text unit; **1** - "%"; **2** - "mA"; **3** - "A"; **4** - "mV"; **5** - "V"; **6** - "°C"; **7** - "°F"; **8** - "K"; **9** - "Hz"; **10** - "kHz"; **11** - "hPa"; **12** - "MPa"; **13** - "bar"; **14** - "m/s"; **15** - "m^3"; **16** - "l/min"; **17** - "user"
0104h	Yes [8]	20h ÷ FFh [8]	**First** character of **Temperature** input name, in ASCII code
0105h	Yes [8]	20h ÷ FFh [8]	**Second** character of **Temperature** input name, in ASCII code
0106h	Yes [8]	20h ÷ FFh [8]	**Third** character of **Temperature** input name, in ASCII code
0107h	Yes [8]	20h ÷ FFh [8]	**Fourth** character of **Temperature** input name, in ASCII code
0108h	Yes [8]	20h ÷ FFh [8]	**Fifth** character of **Temperature** input name, in ASCII code
0109h	Yes [8]	20h ÷ FFh [8]	**Sixth** character of **Temperature** input name, in ASCII code
010Ah	Yes [8]	20h ÷ FFh [8]	**First** character of text unit for **Temperature**, in ASCII code
010Bh	Yes [8]	20h ÷ FFh [8]	**Second** character of text unit for **Temperature**, in ASCII code
010Ch	Yes [8]	20h ÷ FFh [8]	**Third** character of text unit for **Temperature**, in ASCII code
010Dh	Yes [8]	20h ÷ FFh [8]	**Fourth** character of text unit for **Temperature**, in ASCII code
0120h	Yes [9]	0 ÷ 1 [9]	"**RH. measure**" parameter in "**Humidity**" submenu: **0** – input off; **1** – input active

Register	Write	Range	Register description
0121h	Yes [9)]	0 ÷ 1 [9)]	"**Recalib.**" parameter in "**Humidity**" submenu: **0** – recalibration active; **1** – no recalibration
0122h	Yes [9)]	0 ÷ 17 [9)]	"**Graph. unit**" parameter in "**Humidity**" submenu: **0** – same as text unit; **1** - "%"; **2** - "mA"; **3** - "A"; **4** - "mV"; **5** - "V"; **6** - "°C"; **7** - "°F"; **8** - "K"; **9** - "Hz"; **10** - "kHz"; **11** - "hPa"; **12** - "MPa"; **13** - "bar"; **14** - "m/s"; **15** - "m^3"; **16** - "l/min"; **17** - "user"
0123h	Yes [9)]	20h ÷ FFh [9)]	**First** character of **Humidity** input name, in ASCII code
0124h	Yes [9)]	20h ÷ FFh [9)]	**Second** character of **Humidity** input name, in ASCII code
0125h	Yes [9)]	20h ÷ FFh [9)]	**Third** character of **Humidity** input name, in ASCII code
0126h	Yes [9)]	20h ÷ FFh [9)]	**Fourth** character of **Humidity** input name, in ASCII code
0127h	Yes [9)]	20h ÷ FFh [9)]	**Fifth** character of **Humidity** input name, in ASCII code
0128h	Yes [9)]	20h ÷ FFh [9)]	**Sixth** character of **Humidity** input name, in ASCII code
0129h	Yes [9)]	20h ÷ FFh [9)]	**First** character of text unit for **Humidity**, in ASCII code
012Ah	Yes [9)]	20h ÷ FFh [9)]	**Second** character of text unit for **Humidity**, in ASCII code
012Bh	Yes [9)]	20h ÷ FFh [9)]	**Third** character of text unit for **Humidity**, in ASCII code
012Ch	Yes [9)]	20h ÷ FFh [9)]	**Fourth** character of text unit for **Humidity**, in ASCII code
0140h	Yes	-9999 ÷ 9999	Displayed value for "**MB1**" input (no decimal point)
0141h	Yes	0 ÷ 1	"**Mode**" parameter in "**MB1**" submenu: **0** – input off; **1** – input active
0142h	Yes	0 ÷ 3	"**Dec. point** "parameter in "**MB1**" submenu: **0** - " 0"; **1** - " 0.0"; **2** - " 0.00"; **3** - "0.000"
0143h	Yes	0 ÷ 49	"**Valid. time**" parameter in "**MB1**", expressed in seconds
0144h	Yes	0 ÷ 17	"**Graph. unit**" parameter in "**MB1**" submenu: **0** – same as text unit; **1** - "%"; **2** - "mA"; **3** - "A"; **4** - "mV"; **5** - "V"; **6** - "°C"; **7** - "°F"; **8** - "K"; **9** - "Hz"; **10** - "kHz"; **11** - "hPa"; **12** - "MPa"; **13** - "bar"; **14** - "m/s"; **15** - "m^3"; **16** - "l/min"; **17** - "user"
0145h	Yes	20h ÷ FFh	**First** character of **MB1** input name, in ASCII code
0146h	Yes	20h ÷ FFh	**Second** character of **MB1** input name, in ASCII code
0147h	Yes	20h ÷ FFh	**Third** character of **MB1** input name, in ASCII code
0148h	Yes	20h ÷ FFh	**Fourth** character of **MB1** input name, in ASCII code
0149h	Yes	20h ÷ FFh	**Fifth** character of **MB1** input name, in ASCII code
014Ah	Yes	20h ÷ FFh	**Sixth** character of **MB1** input name, in ASCII code
014Bh	Yes	20h ÷ FFh	**First** character of text unit for **MB1**, in ASCII code
014Ch	Yes	20h ÷ FFh	**Second** character of text unit for **MB1**, in ASCII code
014Dh	Yes	20h ÷ FFh	**Third** character of text unit for **MB1**, in ASCII code
014Eh	Yes	20h ÷ FFh	**Fourth** character of text unit for **MB1**, in ASCII code
0160h	Yes	-9999 ÷ 9999	Displayed value for "**MB2**" input (no decimal point)
0161h	Yes	0 ÷ 1	"**Mode**" parameter in "**MB2**" submenu: **0** – input off; **1** – input active

Register	Write	Range	Register description
0162h	Yes	0 ÷ 3	"**Dec. point** "parameter in "**MB2**" submenu: **0** - " 0"; **1** - " 0.0"; **2** - " 0.00"; **3** - "0.000"
0163h	Yes	0 ÷ 49	"**Valid. time**" parameter in "**MB2**", expressed in seconds
0164h	Yes	0 ÷ 17	"**Graph. unit**" parameter in "**MB2**" submenu: **0** – same as text unit; **1** - "%"; **2** - "mA"; **3** - "A"; **4** - "mV"; **5** - "V"; **6** - "□C"; **7** - "□F"; **8** - "K"; **9** - "Hz"; **10** - "kHz"; **11** - "hPa"; **12** - "MPa"; **13** - "bar"; **14** - "m/s"; **15** - "m^3"; **16** - "l/min"; **17** - "user"
0165h	Yes	20h ÷ FFh	**First** character of **MB2** input name, in ASCII code
0166h	Yes	20h ÷ FFh	**Second** character of **MB2** input name, in ASCII code
0167h	Yes	20h ÷ FFh	**Third** character of **MB2** input name, in ASCII code
0168h	Yes	20h ÷ FFh	**Fourth** character of **MB2** input name, in ASCII code
0169h	Yes	20h ÷ FFh	**Fifth** character of **MB2** input name, in ASCII code
016Ah	Yes	20h ÷ FFh	**Sixth** character of **MB2** input name, in ASCII code
016Bh	Yes	20h ÷ FFh	**First** character of text unit for **MB2**, in ASCII code
016Ch	Yes	20h ÷ FFh	**Second** character of text unit for **MB2**, in ASCII code
016Dh	Yes	20h ÷ FFh	**Third** character of text unit for **MB2**, in ASCII code
016Eh	Yes	20h ÷ FFh	**Fourth** character of text unit for **MB2**, in ASCII code
0180h	Yes	0 ÷ 4	"**Function**" parameter in "**F1**" submenu: **0** - "OFF"; **1** - "sum"; **2** - "difference"; **3** - "average"; **4** - "dew point"
0181h	Yes	0 ÷ 3	"**Dec. point**" parameter in "**F1**" submenu: **0** - " 0"; **1** - " 0.0"; **2** - " 0.00"; **3** - "0.000"
0182h	Yes [10)]	see description [10)]	"**Source 1**" parameter in "**F1**" submenu. Version dependent (order same as inputs)
0183h	Yes [10)]	see description [10)]	"**Source 2**" parameter in "**F1**" submenu. Version dependent (order same as inputs)
0184h	Yes	0 ÷ 2	"**°C/°F/K**" parameter in "**F1**" submenu: **0** - "Celsius"; **1** - "Fahrenheit"; **2** - "Kelvin"
0185h	Yes	0 ÷ 17	"**Graph. unit**" parameter in "**F1**" submenu: **0** – same as text unit; **1** - "%"; **2** - "mA"; **3** - "A"; **4** - "mV"; **5** - "V"; **6** - "□C"; **7** - "□F"; **8** - "K"; **9** - "Hz"; **10** - "kHz"; **11** - "hPa"; **12** - "MPa"; **13** - "bar"; **14** - "m/s"; **15** - "m^3"; **16** - "l/min"; **17** - "user"
0186h	Yes	20h ÷ FFh	**First** character of **F1** input name, in ASCII code
0187h	Yes	20h ÷ FFh	**Second** character of **F1** input name, in ASCII code
0188h	Yes	20h ÷ FFh	**Third** character of **F1** input name, in ASCII code
0189h	Yes	20h ÷ FFh	**Fourth** character of **F1** input name, in ASCII code
018Ah	Yes	20h ÷ FFh	**Fifth** character of **F1** input name, in ASCII code
018Bh	Yes	20h ÷ FFh	**Sixth** character of **F1** input name, in ASCII code
018Ch	Yes	20h ÷ FFh	**First** character of text unit for **F1**, in ASCII code

Register	Write	Range	Register description
018Dh	Yes	20h ÷ FFh	**Second** character of text unit for **F1**, in ASCII code
018Eh	Yes	20h ÷ FFh	**Third** character of text unit for **F1**, in ASCII code
018Fh	Yes	20h ÷ FFh	**Fourth** character of text unit for **F1**, in ASCII code
01A0h	Yes	0 ÷ 4	"**Function**" parameter in "**F2**" submenu: **0** - "OFF"; **1** - "sum"; **2** - "difference"; **3** - "average"; **4** - "dew point"
01A1h	Yes	0 ÷ 3	"**Dec. point**" parameter in "**F2**" submenu: **0** - " 0"; **1** - " 0.0"; **2** - " 0.00"; **3** - "0.000"
01A2h	Yes [10)]	see description [10)]	"**Source 1**" parameter in "**F2**" submenu. Version dependent (order same as inputs)
01A3h	Yes [10)]	see description [10)]	"**Source 2**" parameter in "**F2**" submenu. Version dependent (order same as inputs)
01A4h	Yes	0 ÷ 2	"**°C/°F/K**" parameter in "**F2**" submenu: **0** - "Celsius"; **1** - "Fahrenheit"; **2** - "Kelvin"
01A5h	Yes	0 ÷ 17	"**Graph. unit**" parameter in "**F2**" submenu: **0** – same as text unit; **1** - "%"; **2** - "mA"; **3** - "A"; **4** - "mV"; **5** - "V"; **6** - "□C"; **7** - "□F"; **8** - "K"; **9** - "Hz"; **10** - "kHz"; **11** - "hPa"; **12** - "MPa"; **13** - "bar"; **14** - "m/s"; **15** - "m^3"; **16** - "l/min"; **17** - "user"
01A6h	Yes	20h ÷ FFh	**First** character of **F2** input name, in ASCII code
01A7h	Yes	20h ÷ FFh	**Second** character of **F2** input name, in ASCII code
01A8h	Yes	20h ÷ FFh	**Third** character of **F2** input name, in ASCII code
01A9h	Yes	20h ÷ FFh	**Fourth** character of **F2** input name, in ASCII code
01AAh	Yes	20h ÷ FFh	**Fifth** character of **F2** input name, in ASCII code
01ABh	Yes	20h ÷ FFh	**Sixth** character of **F2** input name, in ASCII code
01ACh	Yes	20h ÷ FFh	**First** character of text unit for **F2**, in ASCII code
01ADh	Yes	20h ÷ FFh	**Second** character of text unit for **F2**, in ASCII code
01AEh	Yes	20h ÷ FFh	**Third** character of text unit for **F2**, in ASCII code
01AFh	Yes	20h ÷ FFh	**Fourth** character of text unit for **F2**, in ASCII code
0400h	Yes	-9999 ÷ 9999	The value of "**X**" coordinate of point **no. 1** of the user defined characteristic for UN1, expressed in 0.1%
0401h	Yes	-9999 ÷ 9999	The value of "**Y**" coordinate of point **no. 1** of the user defined characteristic for UN1, no decimal point included
0402h [5)] ÷ 0425h [5)]			Next pairs of "**X**" and "**Y**" coordinates of point no. **2** ÷ **19** of the user defined characteristic for UN1
0426h	Yes	-9999 ÷ 9999	The value of "**X**" coordinate of point **no. 20** of the user defined characteristic for UN1, expressed in 0.1%
0427h	Yes	-9999 ÷ 9999	The value of "**Y**" coordinate of point **no. 20** of the user defined characteristic for UN1, no decimal point included
0430h	Yes	-9999 ÷ 9999	The value of "**X**" coordinate of point **no. 1** of the user defined characteristic for UN2, expressed in 0.1%

Register	Write	Range	Register description
0431h	Yes	-9999 ÷ 9999	The value of "**Y**" coordinate of point **no. 1** of the user defined characteristic for UN2, no decimal point included
0432h [5] ÷ 0455h [5]			Next pairs of "**X**" and "**Y**" coordinates of point no. **2** ÷ **19** of the user defined characteristic for UN2
0456h	Yes	-9999 ÷ 9999	The value of "**X**" coordinate of point **no. 20** of the user defined characteristic for UN2, expressed in 0.1%
0457h	Yes	-9999 ÷ 9999	The value of "**Y**" coordinate of point **no. 20** of the user defined characteristic for UN2, no decimal point included
0460h	Yes	-9999 ÷ 9999	The value of "**X**" coordinate of point **no. 1** of the user defined characteristic for temperature sensor, expressed in 0.1%
0461h	Yes	-9999 ÷ 9999	The value of "**Y**" coordinate of point **no. 1** of the user defined characteristic for temperature sensor, no decimal point included
0462h [5] ÷ 0485h [5]			Next pairs of "**X**" and "**Y**" coordinates of point no. **2** ÷ **19** of the user defined characteristic for temperature sensor
0486h	Yes	-9999 ÷ 9999	The value of "**X**" coordinate of point **no. 20** of the user defined characteristic for temperature sensor, expressed in 0.1%
0487h	Yes	-9999 ÷ 9999	The value of "**Y**" coordinate of point **no. 20** of the user defined characteristic for temperature sensor, no decimal point included
0490h	Yes	-9999 ÷ 9999	The value of "**X**" coordinate of point **no. 1** of the user defined characteristic for humidity sensor, expressed in 0.1%
0491h	Yes	-9999 ÷ 9999	The value of "**Y**" coordinate of point **no. 1** of the user defined characteristic for humidity sensor, no decimal point included
0492h [5] ÷ 04B5h [5]			Next pairs of "**X**" and "**Y**" coordinates of point no. **2** ÷ **19** of the user defined characteristic for humidity sensor
04B6h	Yes	-9999 ÷ 9999	The value of "**X**" coordinate of point **no. 20** of the user defined characteristic for humidity sensor, expressed in 0.1%
04B7h	Yes	-9999 ÷ 9999	The value of "**Y**" coordinate of point **no. 20** of the user defined characteristic for humidity sensor, no decimal point included
0600h	Yes	0 ÷ 2	"**Mode**" parameter in "**Layout**" submenu: **0** - single channel; **1** - two channels; **2** - four channels
0601h	Yes	see description [11]	"**Swap. [sec]**" parameter in "**Layout**" submenu, expressed in seconds
0602h	Yes	see description [11]	"**Ch1 source**" parameter in "**Layout**" submenu: values version dependent (same order as inputs)
0603h	Yes	see description [11]	"**Ch2 source**" parameter in "**Layout**" submenu: values version dependent (same order as inputs)
0604h	Yes	see description [11]	"**Ch3 source**" parameter in "**Layout**" submenu: values version dependent (same order as inputs)
0605h	Yes	see description [11]	"**Ch4 source**" parameter in "**Layout**" submenu: values version dependent (same order as inputs)
0607h	Yes	0 ÷ 1	Language parameter from "**Language**" menu: **0** - "English"; **1** - "Polish"

Register	Write	Range	Register description
0608h	Yes	0 ÷ 2	**"Backlight**" parameter in "**Display**" submenu: **0** - "permanent"; **1** - "temporary"
0609h	Yes	0 ÷ 20	"**Brightness**" parameter in "**Display**" submenu.
060Ah	Yes	0 ÷ 10	"**Contrast**" parameter in "**Display**" submenu.
060Bh	No	0 ÷ 1	Informs about mounting the display: **0** – display is not mounted; **1** – display is mounted
060Ch	Yes	0 ÷ 1	This register allows turning display on and off: **0** – display is on; **1** – display is off
060Eh	Yes	0 ÷ 1	"**Display mode**" parameter in "**Display**" submenu: **0** – normal; **1** – reversed

1) - these registers are active only if device is equipped with analogue output.
2) - after writing to register no 20h the device responds with an "old" address in the message.
3) - after writing to register no 22h the device responds with the new baud rate.
4) - the value of the "**Remote conf.**" parameter is also connected to write to this register, so it is possible to block a writes, but impossible to unblock writes via RS-485 interface, The unblocking of the writes is possible from menu level only.
5) - the pairs of "**X** -**Y**" coordinates may be defined for any free point. The pair is "free" (it means that particular point is not defined) if "**X**" coordinate of this point is equal 8000h. After writing both X and Y coordinate the point is defined and used in calculation of result. The coordinates of any point can be changed at any time.
6) - applies only to Unx1, Unx2 UN + SHT, UN + DS versions.
7) - applies only to Unx2 versions.
8) - applies only to UN + SHT, UN + DS, SHT, DS versions.
9) - applies only to UN + SHT, SHT versions.
10) - ranges for version Unx1, DS are 0 ÷ 2, for version Unx2, UN+DS, SHT are 0 ÷ 3, for version UN+SHT are 0 ÷ 4.
11) - ranges for version Unx1, DS are 0 ÷ 5, for version Unx2, UN+DS, SHT are 0 ÷ 6, for version UN+SHT are 0 ÷ 7.

8.2. TRANSMISSION ERRORS DESCRIPTION

If an error occurs while write or read of single register, then the device sends an error code according to Modbus RTU specifications (example message no 1).

Error codes:
01h - illegal function (only functions 03h, 06h and 10h are available),
02h - illegal register address
03h - illegal data value
08h - no write permission (see: "**Remote fonf.**" parameter)
A0h - exceed of upper border of input range
60h - exceed of lower border of input range

A0h and 60h codes can appear only during reg. 01h is reading by 03h function (read of a single register).

8.3. EXAMPLES OF QUERY/ANSWER FRAMES

Examples apply for device with address 1. All values are represent hexadecimal.

Field description:

ADDR	Device address on modbus network
FUNC	Function code
REG H,L	Starting address (address of first register to read/write, Hi and Lo byte)
COUNT H,L	No. of registers to read/write (Hi and Lo byte)
BYTE C	Data byte count in answer frame
DATA H,L	Data byte (Hi and Lo byte)
CRC L,H	CRC error check (Hi and Lo byte)

1. Read of the displayed value (measurement), ProSens device address = 01h:

ADDR	FUNC	REG H,L		COUNT H,L		CRC L,H	
01	03	00	01	00	01	D5	CA

a) The answer (we assume that the measure result is not out of range):

ADDR	FUNC	BYTE C	DATA H,L		CRC L,H	
01	03	02	00	FF	F8	04

DATA H, L - displayed value = 255, no decimal point.
Decimal point position can be read from reg. 03h.

b) The answer (if an error occur):

ADDR	FUNC	ERROR	CRC L,H	
01	83	60	41	18

ERROR - error code = 60h, bottom border of the measurement range is exceeded

2. Read of device ID code

ADDR	FUNC	REG H,L		COUNT H,L		CRC L,H	
01	03	00	21	00	01	D4	00

The answer:

ADDR	FUNC	BYTE C	DATA H,L		CRC L,H	
01	03	02	30	10	14	7C

DATA - identification code (3010h)

3. Change of the device address from 1 to 2 (write to reg. 20h)

ADDR	FUNC	REG H,L		DATA H,L		CRC L,H	
01	06	00	20	00	02	09	C1

DATA H - 0
DATA L - new device address (2)

The answer (the same as the message):

ADDR	FUNC	REG H,L		DATA H,L		CRC L,H	
01	06	00	20	00	02	09	C1

4. Change of baud rate of all devices connected to the net (BROADCAST message).

ADDR	FUNC	REG H,L		COUNT H,L		CRC L,H	
00	06	00	22	00	04	29	D2

DATA H - 0
DATA L - 4, new baud rate 19200 baud

Device do not reply to BROADCAST-type messages.

5. Read of the registers 1, 2 and 3 in one message (example of reading a number of registries in one frame):

ADDR	FUNC	REG H,L		COUNT H,L		CRC L,H	
01	03	00	01	00	03	54	0B

COUNT L - the count of being read registers (max.16)

The answer:

ADDR	FUNC	BYTE C	DATA H1,L1		DATA H2,L2		DATA H3,L3		CRC L,H	
01	03	06	00	0A	00	00	00	01	78	B4

DATA H1, L1 - reg. 01h (10 - displayed value ”1.0”),
DATA H2, L2 - reg. 02h (0 - no errors),,
DATA H3, L3 - reg. 03h (1 - decimal point position ” 0.0”).

There is no full implementation of the Modbus Protocol in the device. The functions presented above are available only.

9. DEFAULT AND USER'S SETTINGS LIST

Parameter	Description	Default value	User's value	Desc. page
Display settings parameters (“Screen settings” menu)				
	“Layout” submenu			
Mode	Display division	2 channels		66
Ch1 source	Channel 1 input select	OFF *		66
Ch2 source	Channel 2 input select	OFF *		66
Ch3 source	Channel 3 input select	OFF *		66
Ch4 source	Channel 4 input select	OFF *		66
Swap [sec.]	Measurement screen switch interval	0		66
	“Display” submenu			
Backlight	Display backlight	permanent		67
Brightness	Display brightness	100%		67
Contrast	Display contrast	50%		67
Display mode	Pixels displaying mode	normal		67
Built-in inputs parameters (“Inputs” menu)				
	“Temperature” submenu			
T. measure	Turning on temperature input	ON		67
Input name	Input name defined by the user	INx		67
°C/K/°F	Temperature input measurement scale	Celsius		67
Recalib.	Sensor characteristic recalibration	OFF		67
Char. opts.	Processing characteristic parameters menu			67
Add point	Adding point to temperature sensor characteristic (in Char. opts. menu)			67
Del point	Removing point from temperature sensor characteristic (in Char. opts. menu)			67
Edit point	Editing point in temperature sensor characteristic (in Char. opts. menu)			67
Def. points	View of all defined points in temperature sensor characteristic (in Char. opts. menu)			67
Charakterys.	View of segregated points in form of temperature sensor characteristic (in Char. opts. menu)			67
Txt. unit	Four-characters selected channel text unit	mA		68
Graph unit	Selected channel graphic unit	%		68

Parameter	Description	Default value	User's value	Desc. page
	“Humidity” submenu			
RH. measure	Turning on humidity input	ON		68
Input name	Input name defined by the user	INx		68
Recalib.	Sensor characteristic recalibration	OFF		68
Char. opts.	Processing characteristic parameters menu			68
Add point	Adding point to humidity sensor characteristic (in Char. opts. menu)			68
Del point	Removing point from humidity sensor characteristic (in Char. opts. menu)			68
Edit point	Editing point in humidity sensor characteristic (in Char. opts. menu)			68
Def. points	View of all defined points in humidity sensor characteristic (in Char. opts. menu)			68
Charakterys.	View of segregated points in form of humidity sensor characteristic (in Char. opts. menu)			68
Txt. unit	Four-characters selected channel text unit	mA		68
Graph unit	Selected channel graphic unit	%		68
	“UN1” and “UN2” submenu			
Input type	Measured quantity selection	0-20 mA		69
Input name	Input name defined by the user	INx		69
Func. type	Processing characteristic type	linear		69
Char. opts.	Processing characteristic parameters menu			69
Add point	Adding point to user characteristic (in Char. opts. menu)			69
Del point	Removing point from user characteristic (in Char. opts. menu)			69
Edit point	Editing point in user characteristic (in Char. opts. menu)			69
Def. points	View of all defined points in user characteristic (in Char. opts. menu)			69
Characteris.	View of segregated points in form of user characteristic (in Char. opts. menu)			69
PT wire	PT sensor wire method	3 wire		70
Filter	Filtering time constant	0		70
Hold	Peak detect options			70
Mode	Detected measured signal changes (in “Hold” menu)	normal		70
Value	Peak and drop value (in “Hold” menu)	0.0		70

Parameter	Description	Default value	User's value	Desc. page
Hold time	Peak value displaying time (in “Hold” menu)	0.0		70
Disp. value	Type of value presented on the display (in “Hold” menu)	real		70
Tank th1	Hight of the first part of the tank	0		70
Tank th2	Hight of the second part of the tank	0		70
Tank th3	Hight of the third part of the tank	0		70
Tank td	Tank diameter	1		70
Tank tSn	Position of the probe	0		70
Tank tSh	Measurement range	2000		70
Offset	Correction for temperature inputs	0		72
°C/K/°F	Temperature input measurement scale	Celsius		72
Dec. point	Decimal point position	0		72
Lo value	Minimal displayed value in defined range	0		72
Hi value	Maximal displayed value in defined range	1000		72
Lo ext. [%]	Percentage extension of the low measurement range	20		72
Hi ext. [%]	Percentage extension of the high measurement range	20		72
Txt. unit	Four-characters selected channel text unit	mA		72
Graph unit	Selected channel graphic unit	%		72
	“MB1” and “MB2” submenu			
Mode	Turns on the Modbus input	OFF		72
Input name	Input name defined by the user	INx		72
Dec. point	Decimal point position	0		72
Valid. time	Awaiting time for new write into a register	0		72
Txt. unit	Four-characters selected channel text unit	mA		72
Graph unit	Selected channel graphic unit	%		72
	“F1” and “F2” submenu			
Function	Functions selection	OFF		72
Input name	Input name defined by the user	INx		73
Precision	Precision of displayed result	0		73
Source 1	Input for the first source of the function	First installed input		73
Source 1	Input for the second source of the function	First installed input		73
°C/K/°F	Displayed result temperature scale	Celsius		73

Parameter	*Description*	*Default value*	*User's value*	*Desc. page*
Txt. unit	Four-characters selected channel text unit	mA		73
Graph unit	Selected channel graphic unit	%		73
Built-in output parameters (“Outputs” menu)				
	“AO1” and “AO2” submenu			
Output mode	Analogue output work mode	OFF		73
Source	Analogue output control source	Channel 1		74
Trig. value	Analogue output control value type	real		74
Lo value	Minimal displayed value in defined range	0.0		74
Hi value	Maximal displayed value in defined range	100.0		74
Lo ext. [%]	Percentage extension of the low measurement range	5.0		74
Hi ext. [%]	Percentage extension of the high measurement range	5.0		74
Alarm	Alarm situation output reaction	depending on output type		75
Disp. mode	Analogue output displaying mode	normal		75
	“DO1” and “DO2” submenu			
Mode	Relay work mode	no action		75
Source	Relay control source	Channel 1		76
Trig. value	Relay control value type	real		76
SetP1	Relay first threshold	20.0		76
SetP2	Relay second threshold	40.0		76
hysteresis	Relay hysteresis	0.0		76
tON	Relay turn on delay time	0.0		76
tOFF	Relay turn off delay time	0.0		76
Unit	“**tON**” and “**tOFF**” parameters unit	second		76
Alarm	Alarm situation relay reaction	OFF		76
Alarm situation signal settings (“Buzzer” menu)				
Alarm Ch1-4	Alarm situation signal for any active channel	OFF		77
DO1 alarm	Alarm signal when relay 1 is on	OFF		77
DO2 alarm	Alarm signal when relay 2 is on	OFF		77
Access to menu options (“Password” menu)				
Password	User's password	0000		77
RS-485 input options (“RS485 setting” menu)				
Address	Address of the device	0		77

Parameter	*Description*	*Default value*	*User's value*	*Desc. page*
Baud rate	Transmission baud rate	9600		77
Remote conf.	Permission for writing parameters via RS-485	ON		77
Timeout	Maximal time between correct frames	0		77
Resp. delay	Additional delay of the transmission baud rate	Std		77
Language options (“Language” menu)				
Selected	Current selected language	English		78
Relay parameters access options (“Quick Access” menu)				
DO1	Quick access to relay 1 parameters	editable		79
DO2	Quick access to relay 2 parameters	editable		79



SIMEX Sp. z o.o.
ul. Wielopole 11
80-556 Gdańsk
Poland

tel.: (+48 58) 762-07-77
fax: (+48 58) 762-07-70

http://www.simex.pl
e-mail: info@simex.pl