MURR ELEKTRONIK
stay connected

MOSA M8 female straight field-wireable (IDC) Slimline, 4p, 0,14-0,34qmm

Female straight
4-pole
Insulation displacement technology
Connection cross section: 0.14...0.34 mm²

Image



Vicarious picture

Form	
	08391
Technical Data	
Operating voltage	max. 32 V AC/DC
Operating current per contact	max. 4 A
Connection cross section	0.14...0.34 mm² (conductor diameter min. 0.1 mm)
Sealing range (cable diameter)	2.5...5.1 mm (gasket included)
Wire isolation	PVC, PP, TPE
Outer wire diameter	1.0...1.6 mm
Protection	IP65 and IP67 when plugged and screwed down (EN 60529)
Temperature range	-25...+85 °C
Commercial data	
Net weight	15
Weight unit	Gram
Basic unit	pc.
Customs tariff number	85369010
Unit (piece)	1
Minimum order quantity (piece)	1

All data on this data sheet was compiled carefully.
Liability regarding correctness, completeness, and actuality is limited to gross negligence. Created: 01/14

stay connected

Contact layout

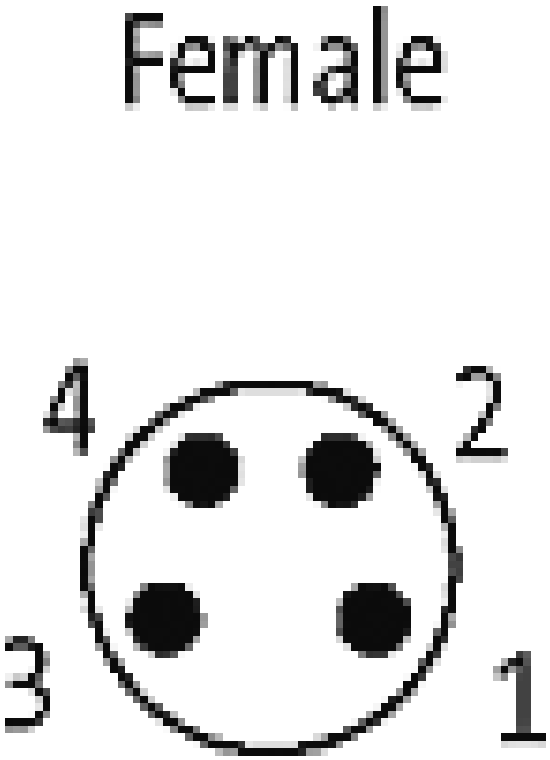

Circuit diagram

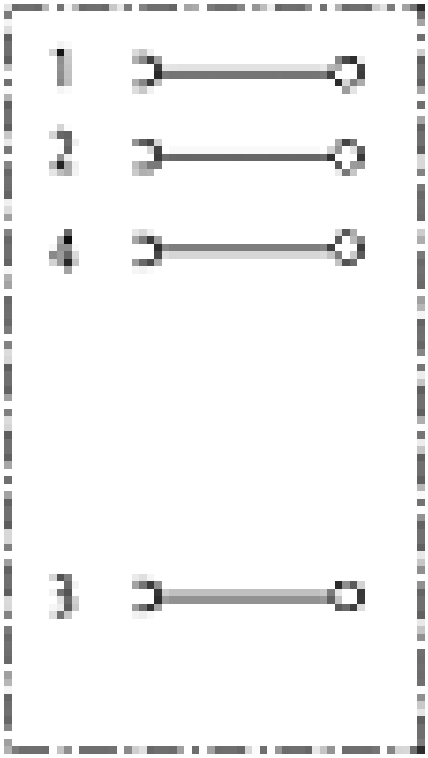

All data on this data sheet was compiled carefully.
Liability regarding correctness, completeness, and actuality is limited to gross negligence. Created: 01/14

stay connected

Dimension drawing

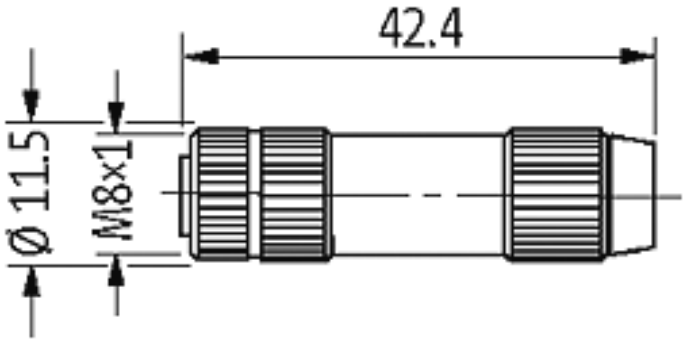

All data on this data sheet was compiled carefully.
Liability regarding correctness, completeness, and actuality is limited to gross negligence. Created: 01/14