E38505

Thermowell for temperature sensors

THERMOWELL, D3/G1/2 conical/EL=20

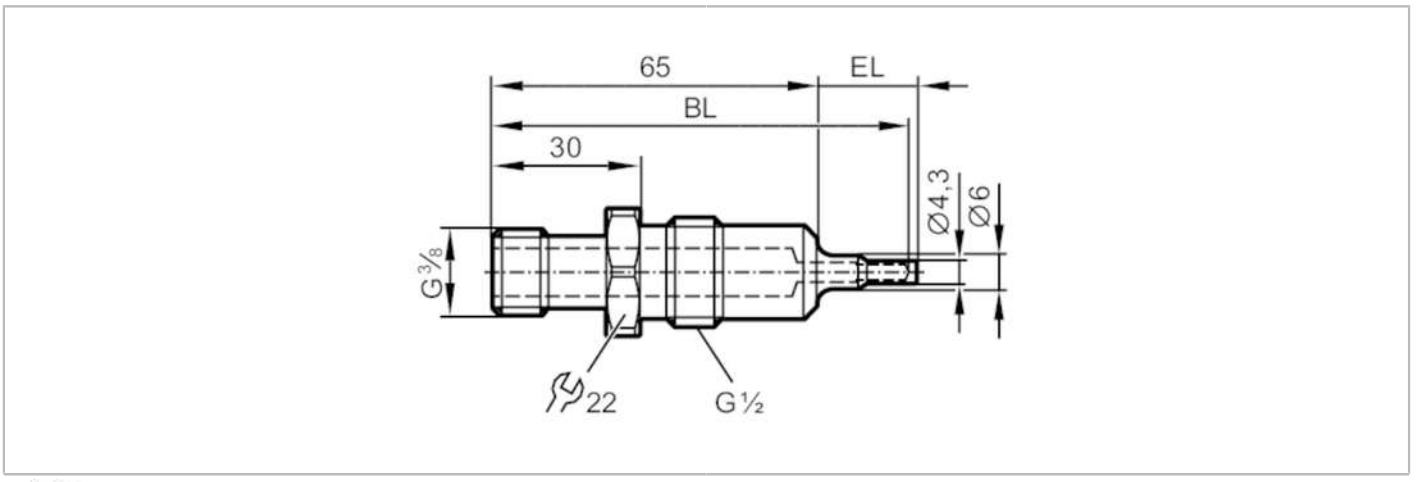

EC 1935/2004

Application		
Design		for temperature sensors EL = 83 mm
Pressure rating	[bar]	16
Mechanical data		
Weight	[g]	101.2
Materials		stainless steel (1.4435 / 316L)
Tightening torque	[Nm]	20
Sensor connection		G 3/8 internal thread Ø 3 mm
Process connection		G 1/2
Surface characteristics Ra/Rz of the wetted parts		< 0.4 / -
Installation length EL	[mm]	20
Bore length BL	[mm]	83
Remarks		
Pack quantity		1 pcs.