22ECT35 Ultra EC™

Ø 22 mm • 4-pole • 34 W

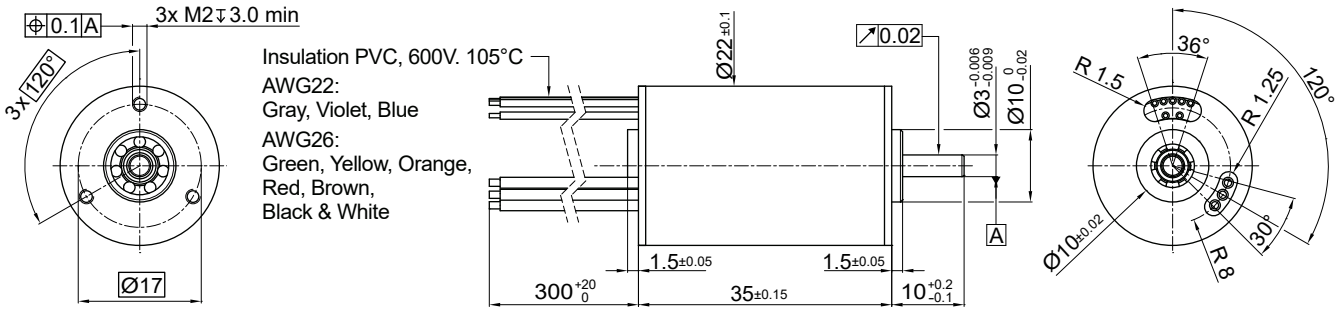

Dimensions in mm.

Electrical Data		Symbol	22ECT35 10B-xxx.01			Unit
			32	52	80	
1	Nominal Voltage	U_N	12	24	24	Volt
2	Optimization Direction	-	Symmetrical	Symmetrical	Symmetrical	-
3	No-Load Speed	n_0	10,330	12,400	8,100	rpm
4	Typical No-Load Current	I_0	100	90	40	mA
5	Max Continuous Mechanical Power (@25°C)	P_{max}	34.0	34.0	34.0	W
6	Max Continuous Current	$I_{e\,max}$	1.8	1.1	0.7	A
7	Max Continuous Torque	$M_{e\,max}$	20 (2.84)	19.9 (2.82)	19.5 (2.77)	mNm (oz-in)
8	Back EMF Constant	k_E	1.14	1.86	2.86	V/1000 rpm
9	Torque Constant	k_M	10.9	17.8	27.3	mNm/A
10	Motor Regulation	R/k^2	11.8	11.8	12.3	10^3/Nms
11	Motor Regulation	$k/R^{½}$	9.2 (1.31)	9.2 (1.31)	9 (1.28)	mNm/W^{½} (oz-in/W^{½})
12	Internal Resistance - phase to phase	R_l	1.40	3.73	9.20	ohms
13	Line to Line Resistance at Connectors	R_L	1.43	3.76	9.23	ohms
14	Inductance Phase to Phase	L	0.12	0.32	0.75	mH
15	Mechanical Time Constant	τ_m	4.2	4.2	4.4	ms
16	Electrical Time Constant	τ_e	0.09	0.08	0.08	ms
General Data						
17	Maximum Motor Speed	n_{max}	20,000			rpm
18	Ambient Working Temperature Range	-	-30 to + 100 (-22 to + 212)			°C (°F)
19	Ambient Storage Temperature Range	-	-40 to + 100 (-40 to + 212)			°C (°F)
20	Ball Bearings Preload	-	6.8			N
21	Axial Static Force w/o Shaft Support (max)	-	45			N
22	Maximum Winding Temperature	-	125 (257)			°C (°F)
23	Thermal Resistance	R_{th}	2.3 / 13			°C/W
24	Thermal Time Constant	τ_w	829			s
25	Weight	-	67 (2.37)			g (oz)
26	Rotor Inertia	J	3.6			g-cm^2
27	Hall Sensor Electrical Phasing*	-	120			Electrical °

*Available without hall sensor

Wire	Description
Gray	Phase 1
Violet	Phase 2
Blue	Phase 3
Green	3.5 to 24V DC
Yellow	GND
Orange	Sensor 1
Red	Sensor 2
Brown	Sensor 3
Black	NTC 10 kohm
White	NTC 10 kohm
with hall effect sensor	

