IM0054

Inductive sensor

IMC2020BABOA/SL/LS-100FK

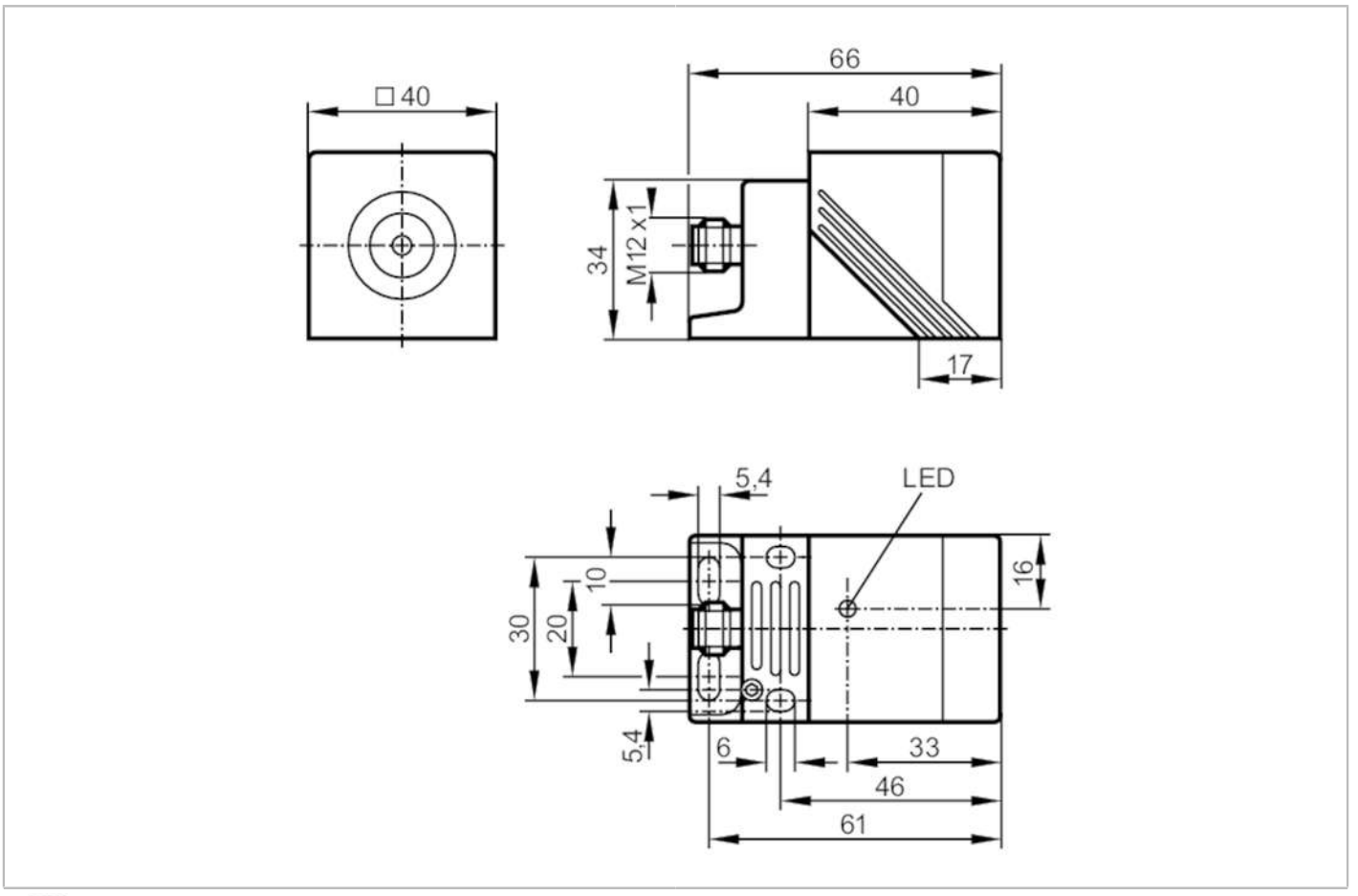

Product characteristics		
Output function		normally open
Sensing range	[mm]	20
Housing		rectangular
Dimensions	[mm]	40 x 40 x 66
Application		
Special feature		Gold-plated contacts
Electrical data		
Operating voltage	[V]	20...250 AC/DC
Protection class		I
Reverse polarity protection		no
Outputs		
Output function		normally open
Max. voltage drop switching output DC	[V]	6
Max. voltage drop switching output AC	[V]	6.5
Minimum load current	[mA]	1.9
Max. leakage current	[mA]	2.5 (250 V AC) / 1.3 (130 V AC) / 0.8 (24 V DC)

IM0054

Inductive sensor

IMC2020BABOA/SL/LS-100FK

Permanent current rating of switching output AC	[mA]	250; (350 (...50 °C))	
Permanent current rating of switching output DC	[mA]	100	
Short-time current rating of switching output	[mA]	2200; (20 ms / 0,5 Hz)	
Switching frequency AC	[Hz]	25	
Switching frequency DC	[Hz]	70	
Short-circuit proof		no	
Overload protection		no	
Detection zone			
Sensing range	[mm]	20	
Real sensing range Sr	[mm]	20 ± 10 %	
Operating distance	[mm]	0...16.2	
Accuracy / deviations			
Correction factor		steel: 1 / stainless steel: 0.9 / brass: 0.4 / aluminium: 0.4 / copper: 0.3	
Hysteresis	[% of Sr]	3...15	
Operating conditions			
Ambient temperature	[°C]	-25...70	
Protection		IP 67	
Tests / approvals			
EMC		EN 60947-5-2	
		EN 55011	class B
MTTF	[years]	599	
Mechanical data			
Weight	[g]	154.5	
Housing		rectangular	
Mounting		flush mountable	
Dimensions	[mm]	40 x 40 x 66	
Materials		housing: PPE; sensing face: PPE orange; end cap: PPS; clamp: PPS black; screw: steel galvanised	
Displays / operating elements			
Display		switching status	1 x LED, yellow
Electrical connection			
Required protection		miniature fuse to IEC60127-2 sheet 1; ≤ 2 A; fast acting	
Remarks			
Remarks		Recommendation: Check the safe functioning of the unit after a short circuit.	
		5 positions of the active zone possible	
Pack quantity		1 pcs.	

IM0054

Inductive sensor

IMC2020BABOA/SL/LS-100FK

Electrical connection - plug

Connector: 1 x M12; coding: C; Locking: brass, white bronze coated; Contacts: gold-plated

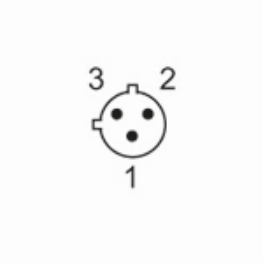

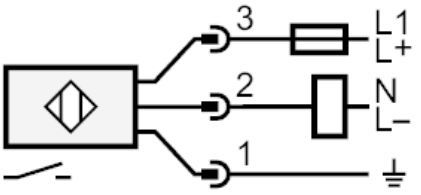

Note miniature fuse to IEC60127-2 sheet 1 ≤ 2 A fast acting