Filter pressure regulator, Series 651

G651APJP1GA00HN

General series information
AVENTICS Series 651 Air Preparation Units

- The AVENTICS Series 651 is an easy-to-install line of pneumatic filters, regulators and lubricators (FRLs) that offer the industry´s highest flow rates and widest temperature ratings. Available in 1/8-inch, and 1/4-inch port sizes, these FRLs are ideal for automotive and tire, packaging, food and beverage, and process applications requiring highly reliable operation and robust, modern-looking equipment.



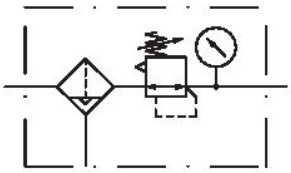

Technical data

Industry	Industrial
Parts	Filter pressure regulator
Reservoir	Reservoir polycarbonate
Port	G 1/8
Nominal flow Qn	730 l/min
Filter porosity	25 µm
Condensate drain	semi-automatic, open without pressure
Pressure gauge	With integrated pressure gauge
Working pressure min.	0 bar
Working pressure max	16 bar
Min. ambient temperature	-20 °C
Max. ambient temperature	50 °C
Certificates	ATEX optional
Regulation range min.	0.5 bar
Regulation range max.	10 bar

Lock type	not lockable
Type	1-part
Hysteresis	0,3 bar
Medium	Compressed air Neutral gases
Medium temperature note	Extended temperature range min./max. (optional) -40 °C ... 80 °C
Weight	0.3 kg

Material

Housing material	Aluminum
Seal material	Nitrile butadiene rubber
Material front plate	Polyamide
Material filter insert	Sintered bronze
Material condensate drain	Plastic
Part No.	G651APJP1GA00HN

Technical information

Max. achievable compressed air class acc. to ISO 8573-1:2010 5 : 8 : 4 (5 µm filter porosity) und 6 : 8 : 4 (25µm filter porosity)

Other filter porosities on request.

Nominal flow Qn at p1= 10 bar, p2= 6,3 bar and Δp = 1 bar

The pressure dew point must be at least 15 °C less than ambient and medium temperature and may not exceed 3 °C.

The oil content of compressed air must remain constant during the life cycle.

Use only the approved oils from AVENTICS. Further information can be found in the “Technical information” document (available in https://www.emerson.com/en-us/support).

Dimensions

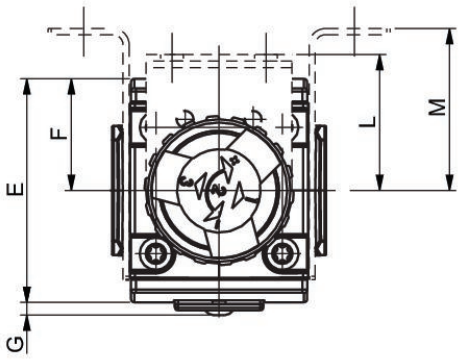

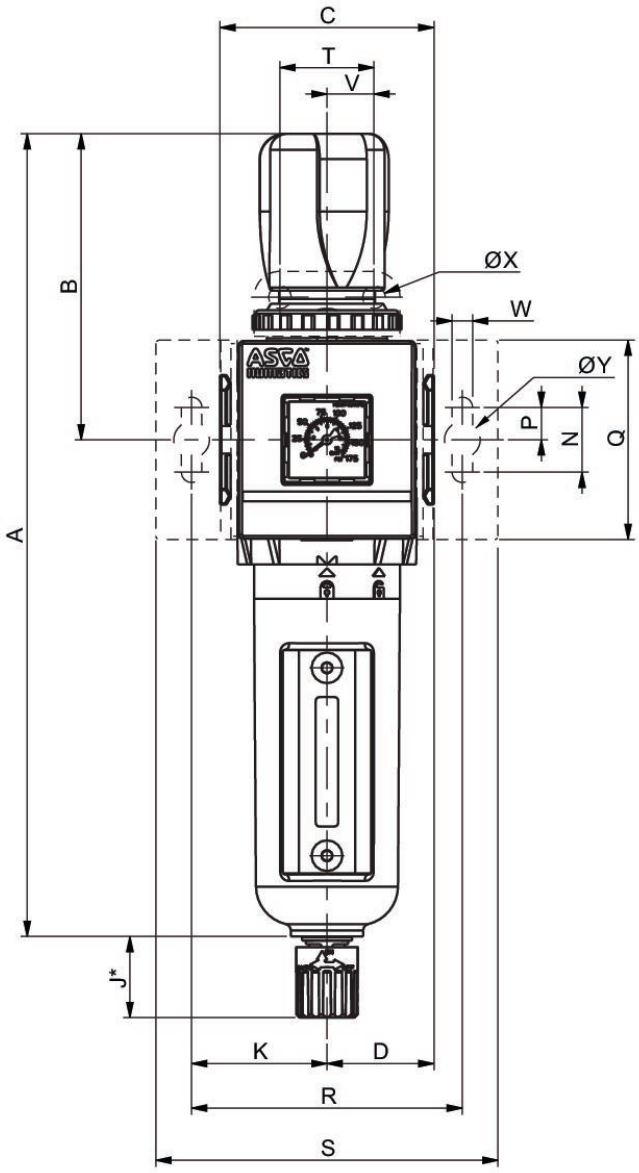

To remove the reservoir, allow a clearance of [[60] mm] from the bottom of the reservoir drain.
*Variable dimension based on the type of drain specified, if an automatic drain is specified, add another [[5] mm] to the “J” dimension.

Series	651
A	215,5
B	77,5
C	50
D	25
E	58
F	29
G	3,4
H	116
J	25
K	35
L	42
M	44,5
N	20
P	10
Q	50
R	70
S	92
T	29
V	14,5
W	6,3
X	7
Y	11

Flow diagram
G 1/4

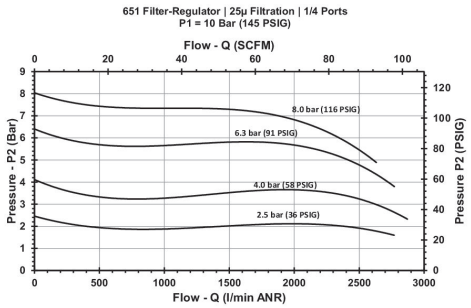

Flow diagram
G 1/8

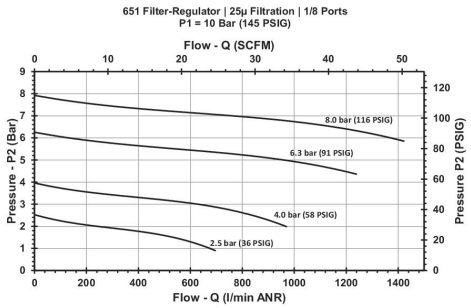

Accessories overview

