DATASHEET - M22-CLED230-W



LED element, white, front mount, cage clamp

Part no.	**M22-CLED230-W**
Catalog No.	**216575**
Alternate Catalog No.	**M22-CLED230-WQ**
EL-Nummer (Norway)	**4355780**

Delivery program

Basic function accessories			LED elements
Description			Cage Clamp is a registered trademark of Wago Kontakttechnik GmbH/Minden, Germany
Connection technique			Cage Clamp
Fixing			Front fixing
Rated operational voltage	U_e	V	85 - 264 V AC, 50/60 Hz
Rated operational current	I_e	mA	5 - 15
Power consumption	$P_{max.}$	W	0.33
Lifespan to EN 60064 at t_a = +25 °C	t_{mean} (AC)	h	100000
Degree of Protection			IP20
			At 230 V
Colour			
			White
			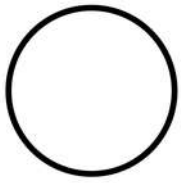
Connection to SmartWire-DT			no
Approval			
Connection technique			Cage Clamp

Notes

For indicator lights, illuminated pushbutton actuators, and illuminated selector switch actuators, the following applies:

M22...-R only in combination with M22-LED...-R

M22...-G only in combination with M22-LED...-G

M22...-W only in combination with M22-LED...-W

M22...-Y only in combination with M22-LED...-W

M22…-B in combination with M22-LED…-W or M22-LED…-B

Technical data

General

Standards			IEC 60947-5-1
Operating torque (screw terminals)		Nm	≦ 0.8
Degree of Protection			IP20
Climatic proofing			Damp heat, constant, to IEC 60068-2-78 Damp heat, cyclic, to IEC 60068-2-30
Ambient temperature			
Open		°C	-25 - +70
Storage		°C	- 40 - + 80

Mounting position			As required
Mechanical shock resistance according to IEC 60068-2-27 Shock duration 11 ms, half-sinusoidal		g	> 30
Mechanical shock resistance		g	30 Shock duration 11 ms Sinusoidal according to IEC 60068-2-27
Terminal capacities		mm^2	
Solid		mm^2	0.75 - 2.5
Stranded		mm^2	0.5 - 2.5

Contacts

Rated impulse withstand voltage	U_{imp}	V AC	6000
Rated insulation voltage	U_i	V	500
Overvoltage category/pollution degree			III/3
Indoor and protected outdoor installation			

Design verification as per IEC/EN 61439

Technical data for design verification			
Rated operational current for specified heat dissipation	I_n	A	0
Heat dissipation per pole, current-dependent	P_{vid}	W	0
Equipment heat dissipation, current-dependent	P_{vid}	W	0
Static heat dissipation, non-current-dependent	P_{vs}	W	1
Heat dissipation capacity	P_{diss}	W	0
Operating ambient temperature min.		°C	-25
Operating ambient temperature max.		°C	70
IEC/EN 61439 design verification			
10.2 Strength of materials and parts			
10.2.2 Corrosion resistance			Meets the product standard's requirements.
10.2.3.1 Verification of thermal stability of enclosures			Meets the product standard's requirements.
10.2.3.2 Verification of resistance of insulating materials to normal heat			Meets the product standard's requirements.
10.2.3.3 Verification of resistance of insulating materials to abnormal heat and fire due to internal electric effects			Meets the product standard's requirements.
10.2.4 Resistance to ultra-violet (UV) radiation			Meets the product standard's requirements.
10.2.5 Lifting			Does not apply, since the entire switchgear needs to be evaluated.
10.2.6 Mechanical impact			Does not apply, since the entire switchgear needs to be evaluated.
10.2.7 Inscriptions			Meets the product standard's requirements.
10.3 Degree of protection of ASSEMBLIES			Does not apply, since the entire switchgear needs to be evaluated.
10.4 Clearances and creepage distances			Meets the product standard's requirements.
10.5 Protection against electric shock			Does not apply, since the entire switchgear needs to be evaluated.
10.6 Incorporation of switching devices and components			Does not apply, since the entire switchgear needs to be evaluated.
10.7 Internal electrical circuits and connections			Is the panel builder's responsibility.
10.8 Connections for external conductors			Is the panel builder's responsibility.
10.9 Insulation properties			
10.9.2 Power-frequency electric strength			Is the panel builder's responsibility.
10.9.3 Impulse withstand voltage			Is the panel builder's responsibility.
10.9.4 Testing of enclosures made of insulating material			Is the panel builder's responsibility.
10.10 Temperature rise			The panel builder is responsible for the temperature rise calculation. Eaton will provide heat dissipation data for the devices.
10.11 Short-circuit rating			Is the panel builder's responsibility. The specifications for the switchgear must be observed.
10.12 Electromagnetic compatibility			Is the panel builder's responsibility. The specifications for the switchgear must be observed.
10.13 Mechanical function			The device meets the requirements, provided the information in the instruction leaflet (IL) is observed.

Technical data ETIM 7.0

Low-voltage industrial components (EG000017) / Lamp holder block for control circuit devices (EC000204)

Electric engineering, automation, process control engineering / Low-voltage switch technology / Command and alarm device / Bulb socket block for command and alarm devices (ecl@ss10.0.1-27-37-12-09 [AKF027014])			
Transformer integrated			No
With integrated voltage decreasing resistor			No
With light source			Yes
With integrated diode			Yes
Lamp holder			None
Rated voltage Ue at AC 50 Hz		V	85 - 264
Rated voltage Ue at AC 60 Hz		V	85 - 264
Rated voltage Ue at DC		V	0 - 0
Voltage type for actuating			AC
Lamp type			LED
Connection type auxiliary circuit			Spring clamp connection
Colour lamp			White
Type of fastening			Front fastening

Approvals

Product Standards			IEC/EN 60947-5; UL 508; CSA-C22.2 No. 14-05; CSA-C22.2 No. 94-91; CE marking
UL File No.			E29184
UL Category Control No.			NKCR
CSA File No.			012528
CSA Class No.			3211-03
North America Certification			UL listed, CSA certified
Degree of Protection			UL/CSA Type: -

Dimensions

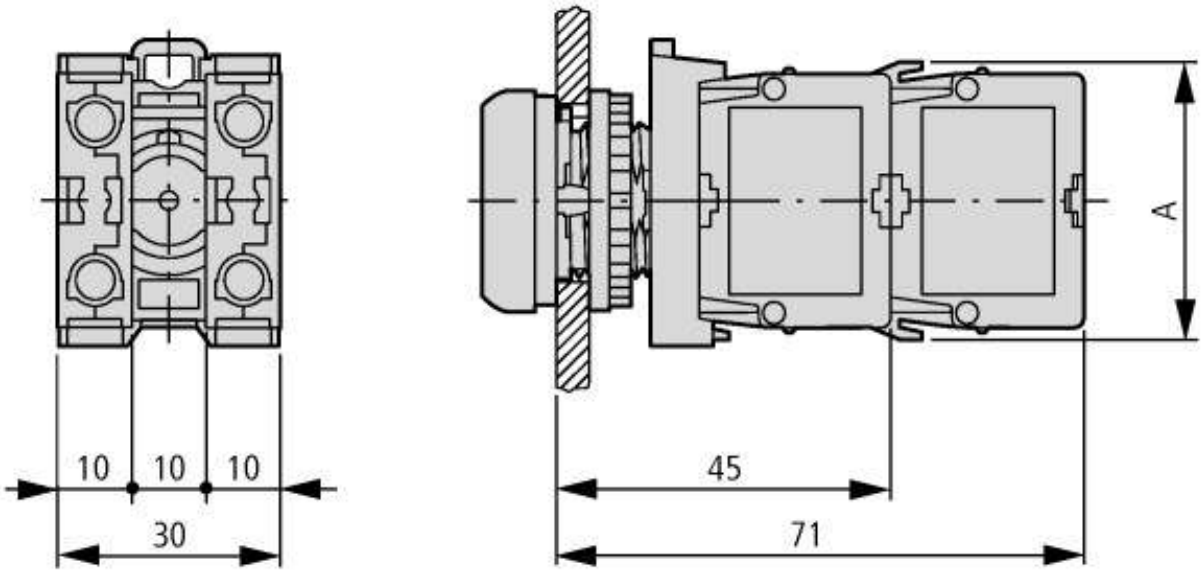

A = 39

Pushbutton with M22-(C)K…
Pushbutton with M22-(C) LED… + M22-XLED…

Additional product information (links)

IL04716002Z (AWA1160-1745) RMQ-Titan System

IL04716002Z (AWA1160-1745) RMQ-Titan System	https://es-assets.eaton.com/DOCUMENTATION/AWA_INSTRUCTIONS/IL04716002Z2020_09.pdf

© 02/2021 by Eaton Industries GmbH