O6H705

Diffuse reflection sensor with background suppression

O6HLFNKG/AS/4P

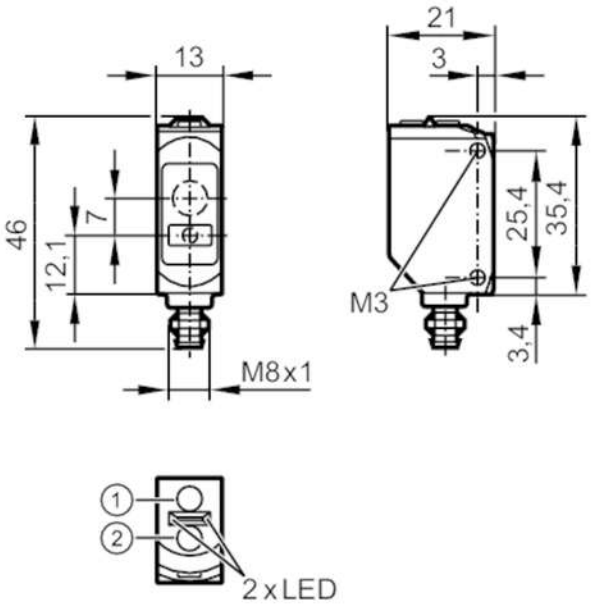

1 Programmiertaste
receiver in upper lens
transmitter in lower lens

Product characteristics		
Type of light		red light
Laser protection class		1
Housing		rectangular
Application		
Special feature		Background suppression
Function principle		Diffuse reflection sensor
Electrical data		
Operating voltage	[V]	10...30 DC
Current consumption	[mA]	16; (24 V)
Protection class		III
Reverse polarity protection		yes
Type of light		red light
Wave length	[nm]	650
Outputs		
Electrical design		NPN
Output function		light-on/dark-on mode; (selectable)
Max. voltage drop switching output DC	[V]	2.5
Permanent current rating of switching output DC	[mA]	100
Switching frequency DC	[Hz]	1000
Short-circuit protection		yes

O6H705

Diffuse reflection sensor with background suppression

O6HLFNKG/AS/4P

Type of short-circuit protection		pulsed	
Detection zone			
Range	[mm]	1...100; (white paper 200 x 200 mm)	
Range on white object (90 % remission)	[mm]	1...100	
Range on grey object (18 % remission)	[mm]	8...100	
Range on black object (6 % remission)	[mm]	12...100	
Range adjustable		yes	
Max. light spot diameter	[mm]	2	
Light spot dimensions refer to		at maximum range	
Background suppression available		yes	
Interfaces			
Communication interface		IO-Link	
Transmission type		COM2 (38,4 kBaud)	
IO-Link revision		1.1	
SDCI standard		IEC 61131-9	
Profiles		Smart Sensor: Device Identification; Device Diagnosis; Teach Channel; Switching Channel; Process Data Variable	
SIO mode		yes	
Required master port type		A	
Min. process cycle time	[ms]	10	
IO-Link process data (cyclical)		**function**	**bit length**
		process value	32
		device status	4
		binary switching information	1
IO-Link functions (acyclical)		application specific tag; operating hours counter; switch-on cycle counter	
Supported DeviceIDs		**Type of operation**	**DeviceID**
		default	526
Operating conditions			
Ambient temperature	[°C]	-10...60	
Protection		IP 65; IP 67	
Tests / approvals			
EMC		EN 60947-5-2	
Laser protection class		1	
Notes on laser protection		Caution:	laser light
		laser class:	1
			EN / IEC60825-1:2007
			EN / IEC60825-1:2014
			Complies with 21 CFR 1040 except for deviations pursuant to Laser Notice No. 50, dated June 2007.
MTTF	[years]	513	

O6H705

Diffuse reflection sensor with background suppression

O6HLFNKG/AS/4P

Mechanical data		
Weight	[g]	19.1
Housing		rectangular
Dimensions	[mm]	46 x 13 x 21
Materials		housing: ABS; PPSU; Sealing: EPDM
Lens material		PMMA
Lens alignment		side lens
Tightening torque	[Nm]	0.5; (screws)

Displays / operating elements		
Display	switching status	1 x LED, yellow
	operation	1 x LED, green

Remarks	
Remarks	operating voltage "supply class 2" according to cULus
Pack quantity	1 pcs.

Electrical connection

Connector: 1 x M8; coding: A

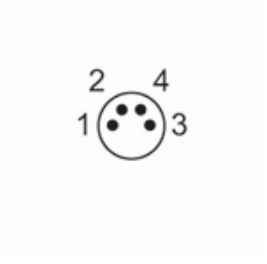

Connection

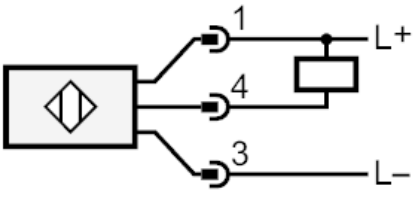

4	OUT / IO-Link

O6H705

Diffuse reflection sensor with background suppression

O6HLFNKG/AS/4P

Other data

Repeatability: 6 σ

	repeatability of the measured values	
Abstand	white (90 % remission)	black (6 %...90 % remission)
20 mm	0.1 mm	0.5 mm
50 mm	0.2 mm	1.0 mm
100 mm	0.5 mm	2.0 mm
	accuracy	
Abstand	white (90 % remission)	black (6 %...90 % remission)
20 mm	± 0.6 mm	± 0.9 mm
50 mm	± 1.5 mm	± 2.0 mm
100 mm	± 3.0 mm	± 4.0 mm

The values apply at	
Extraneous light on the object	< 10 klx
constant ambient conditions	23 °C / 960 hPa
minimum power-on time in minutes	10
IO-Link - measuring mode	

Diagrams and graphs

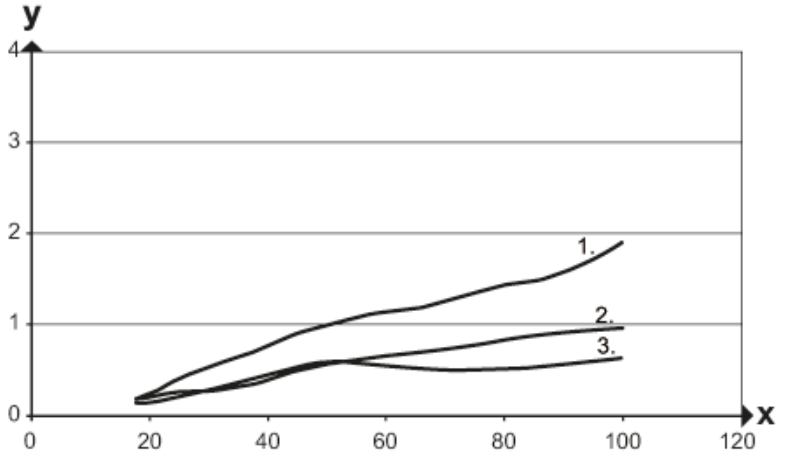

x: distance sensor/object [mm]

y: min. distance object/background [mm]

1 = object black (6 % remission) , background white (90 % remission)

2 = object grey (18 % remission) , background white (90 % remission)

3 = object white (90 % remission) , background white (90 % remission)

O6H705

Diffuse reflection sensor with background suppression

O6HLFNKG/AS/4P

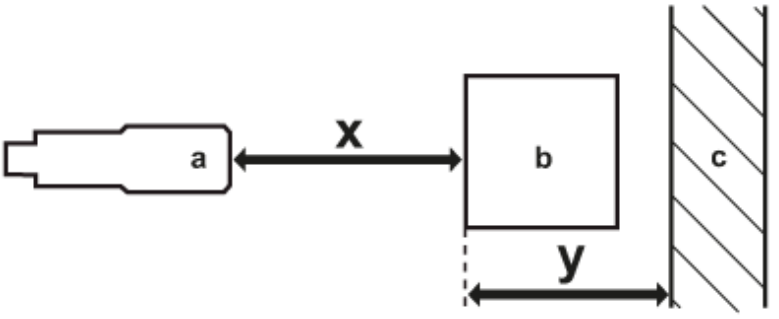

a: sensor

b: object

c: background

x: distance sensor/object [mm]

y: min. distance object/background [mm]