DF2214

Electronic circuit breaker

Fuse/IO-Link/24VDC/2x4A

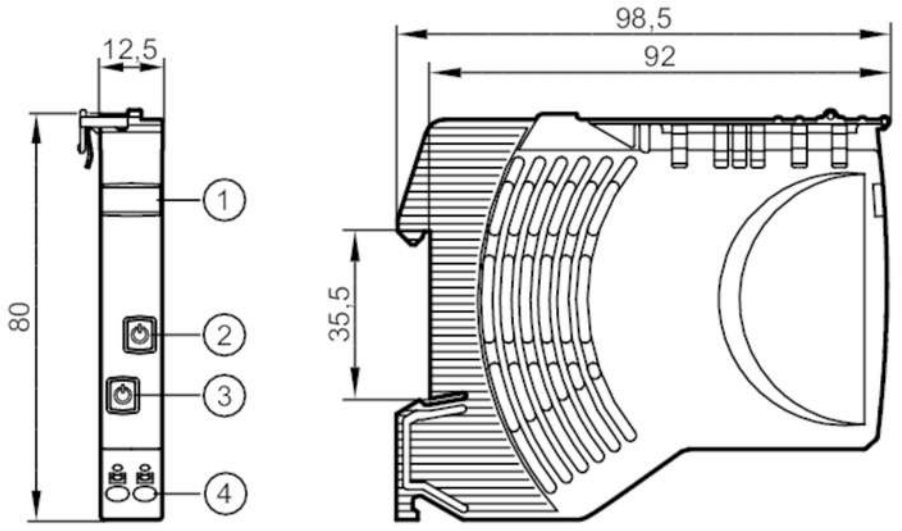

1 panel for labelling
2 pushbutton on / off / reset status LED 2
3 pushbutton on / off / reset status LED 1
4 push-in terminals Outputs 1/2

Electrical data		
Operating voltage	[V]	to SELV/PELV ; “supply class 2” according to UR
Nominal voltage DC	[V]	24
Input voltage DC	[V]	19.2...30
Protection class		III
Mains buffering time (nominal voltage 24 V DC)	[ms]	10
Closed-circuit current	[mA]	8
Power loss (nominal voltage 24 V DC)	[W]	0.96
Number of channels		2
Nominal current	[A]	4
Nominal current (Fail Safe Element)	[A]	4
Outputs		
Load capacitance, total	[mF]	15
Operating conditions		
Ambient temperature	[°C]	-25...60
Storage temperature	[°C]	-40...70
Protection		IP 20; (on the front)
Pollution degree		2
Tests / approvals		
EMC	EN 61000-6-3	radiation of interference
	EN 61000-6-2	immunity

DF2214

Electronic circuit breaker

Fuse/IO-Link/24VDC/2x4A

Mechanical data		
Weight [g]	72.5	
Housing	housing for DIN rail mounting	
Type of mounting	mounting on DIN rail; (TH35 (EN 60715))	
Dimensions [mm]	80 x 12.5 x 98.5	

Displays / operating elements		
Display	status	2 x LED, red / green / orange
Operating elements	2 x	pushbutton

Electrical connection

push-in terminals:

contact lever/strip:

Connection

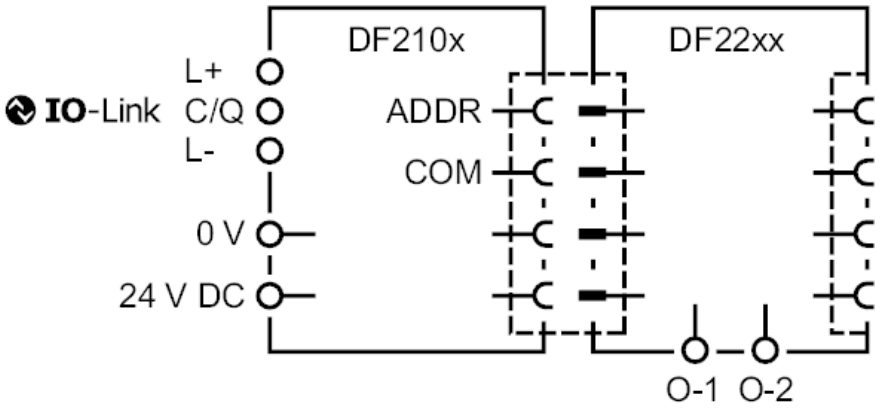

Diagrams and graphs

output characteristics

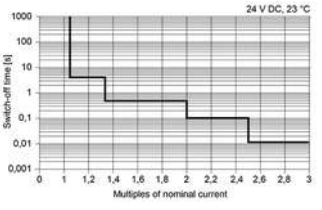

time-current characteristics