25GST2R82 Graphite-Copper commutation Ø25mm 33 mNm

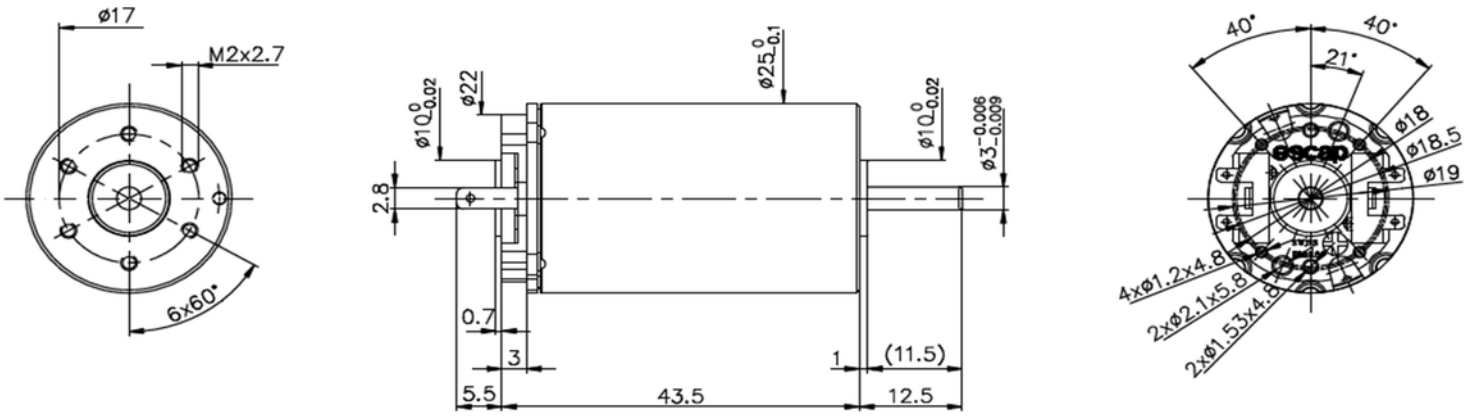

25GST2R82 **** .1

Electrical Data	****	219P	230E	216P	216E	
1 Nominal Voltage	V	18	18	24	35	Volt
2 No-Load Speed	n_0	11,125	11,450	10,320	7,850	rpm
3 No-Load Current	I_0	110.0	110.0	70.0	40.0	mA
4 Terminal Resistance	R	1.6	1.3	3.3	12.5	Ω
5 Output Power	$P_{2max.}$	23.8	26.0	24.0	23.3	W
6 Stall Torque	mNm	172 (24.36)	206 (29.18)	160 (22.66)	118 (16.72)	mNm (oz-in)
7 Efficiency	$\eta_{max.}$	81	83	81	78	%
8 Max continuous speed	$n_{e\ max.}$	12,000	12,000	12,000	12,000	rpm
9 Max continuous torque	$M_{e\ max.}$	30 (4.68)	33 (4.68)	30 (4.25)	30 (4.25)	mNm (oz-in)
10 Max continuous current	$I_{e\ max.}$	2.10	2.30	1.45	0.75	A
11 Back-EMF Constant	k_E	1.60	1.56	2.30	4.40	mV/rpm
12 Torque Constant	k_M	15.30	14.90	22.00	42.00	mNm/A
13 Motor Regulation	R/k^2	6.9	5.9	6.8	7.10	10^3/Nms
14 Friction Torque	T_F	1.68 (0.24)	1.64 (0.24)	1.54 (0.22)	1.68 (0.24)	mNm (oz-in)
15 Rotor Inductance	L	0.08	0.10	0.10	0.80	mH
16 Mechanical Time Constant	τ_m	6.9	5.9	6.8	7.1	ms
17 Rotor Inertia	J	10.00	10.00	10.00	10.00	$g.cm^2$
18 Thermal Resistance (rotor/body)	R_{th1} / R_{th2}	6/13	6/13	6/13	6/13	°C/W
19 Thermal Time Constant (rotor/stator)	τ_{w1}/t_{w2}	10/450	10/450	10/450	10/450	°C/W
20 Operating Temperature Range:	motor	-30°C to 85°C (-22°F to 185°F)				°C (°F)
	rotor	155°C (311°F)				°C (°F)
21 Shaft Load max.:		With ball bearings				
at 3,000 rpm (5mm from bearing)	-radial	12.0 (43.2)				N (oz)
at 3,000 rpm	-axial	680 (2,445.9)				N (oz)
22 Shaft play:	-radial	<0.03 (0.0012)				mm (inch)
	-axial	0.15 (0.0059)				mm (inch)
23 Weight	g	111 (3.92)				g (oz)

Execution				
Gearbox	**Single Shaft**	**E9**	**HEDS**	**MR2**
R32	1	2	4	Contact Us
M22	5	11	Contact Us	Contact Us

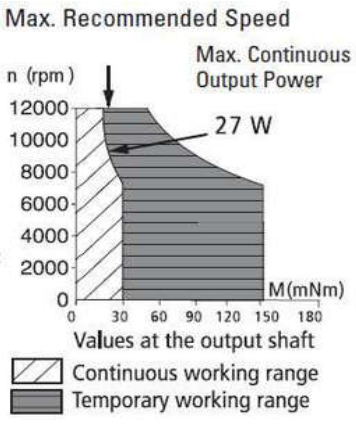

(C) 2013. Portescap. Specifications subject to change without notice.